DIPRAX
PROYECTOS Y AUTOMATISMOS GENERALES

SENSOR DE MEDICIÓN DE PRESIÓN
SERIE PE5

www.diprax.es

El sensor de medición de presión para satisfacer los requisitos más exigentes

Serie PE5

- Navegación simplificada conforme a VDMA
- Aumento de la clase de protección a IP65 e IP67
- Función de offset de punto cero
- Homologación UL, sin sustancias que afecten a la humectación de la pintura
- Opción de conmutación entre corriente y tensión
- Selección libre de PNP, NPN y push-pull
- CE, conforme a RoHS y Reach
- Versión con función de detección de fugas, entrada digital PNP

AVENTICS™

EMERSON™

Todo bajo control de un vistazo

Interfaz sencilla y aplicación flexible. Hay una ventaja para los usuarios que es evidente a primera vista: la gran pantalla a dos colores en rojo y verde.

Preciso, fiable y flexible en todos los sentidos

El PE5 combina precisión electrónica y versatilidad funcional con una excelente facilidad de manejo. Gracias a la sencilla conmutación de las salidas analógicas entre corriente y tensión, así como de conmutación de las salidas digitales entre PNP, NPN y push-pull, junto con el aumento de las clases de protección de IP65 e IP67, el PE5 ofrece una opción flexible para una amplia gama de aplicaciones. Independientemente del entorno, la nueva función de offset del punto cero permite poner a cero el sensor de medición de presión en cualquier momento y consigue que sus funciones de visualización y conmutación sean incluso más precisas que las de su predecesor.

- Sensor de medición de presión con 6 gamas de presión
- Conexión roscada (lados posterior e inferior)
- Modo ajustable de histéresis y ventana, así como NC/NO
- Una variante rentable para medir fugas en cualquier tipo de sistema neumático

El elevado grado de precisión y los tiempos de respuesta extremadamente reducidos ayudan a garantizar el funcionamiento seguro y a optimizar la duración de los ciclos. Gracias a la navegación intuitiva, la programación del sensor de medición de presión es sencilla y flexible, incluye funciones de unidad de medida, puntos de conmutación, histéresis y ventana. El PE5 también ofrece opciones de montaje especialmente flexibles con técnica de uniones probada y ensayada.

Unidad de preparación de aire con PE5

La unidad de mantenimiento de la serie AS3 con PE5 y montaje irecto a través de la conexión neumática en la parte posterior. Conexión eléctrica con tornillo de cierre M12.

Claro y distinto: las ventajas del nuevo sensor de medición de presión de color rojo/verde

- Pantalla grande con tres zonas de visualización
- El color de la pantalla se puede cambiar entre rojo y verde
- La presión del sistema se visualiza con números grandes
- Unidad de medida (psi/bar) en la pantalla
- Visualización simultánea de los puntos de conmutación SP1 y SP2
- Carcasa de una sola pieza
- Función de detección de fugas

AVENTICS™

EMERSON™

CONSIDER IT SOLVED™

Pressure sensor, Series PE5

- Operating pressure -1 ... 0 -1 ... 1 0 ... 6 0 ... 10 0 ... 12 -1 ... 10 bar
- electronic
- Output signal analog 0 - 10 V DC, 4 - 20 mA
- Output signal digital 2 x PNP, NPN, Push-pull PNP, NPN, Push-pull PNP, NPN, push-pull, 1x IO-Link 2x PNP, NPN, push-pull in standard mode, 1x in leakage mode
- Electr. connection Plug M12x1 4-pin Plug M12x1 5-pin
- Compressed air connection Internal thread G 1/4 push-in fitting Ø 4

Type	electronic
Certificates	CE declaration of conformity, cULus, RoHS, Conforms with REACH, Free of substances that impair surface wetting in the coating process
Ambient temperature min./max.	0 ... 60 °C
Medium temperature min./max.	0 ... 60 °C
Medium	Compressed air (max. 40 µm)
Max. oil content of compressed air	40 mg/m³
Measurement	Relative pressure
Display	LCD display, 4 digits, Color setting: green or red
Units displayed	bar psi kPa MPa inHg
Switching logic	NO/NC (adjustable)
Shock resistance max.	30 g
Vibration resistance	5 g (10 - 150 Hz)
Precision (% of full scale value)	±1.5% in temperature range of 10 - 30°C ± 2 % including temperature drift
Repeatability (% of full scale value)	± 0,2 %
Switching time	5 ms
Switching point	adjustable 0 ... 100%
Resetting point	adjustable 0 ... 100%
Hysteresis	adjustable
Delayed hysteresis	adjustable
Window function	adjustable
DC operating voltage min./max.	17 ... 30 V DC
Analog output	0 - 10 V DC, 4 - 20 mA
Quiescent current consumption	40 mA
Analog output linearity	± 0.5% of the final value
Maximum load (analog current output)	600 Ω
Short circuit resistance	Max. 600 ohms (current output) Min. 3K ohms (voltage output)
Mounting types	Directly on hat rail and wall mounting For panel installation using mounting kit via double nipple
Protection class	IP65 IP67 with connections assembled
Weight	0.04 kg

Technical data

Part No.		Operating pressure range min./max.	Protection against overpressure
R412010761		-1 ... 0 bar	5 bar
R412010760		-1 ... 0 bar	5 bar
R412010769		-1 ... 0 bar	5 bar
R412010768		-1 ... 0 bar	5 bar
R412010775		-1 ... 0 bar	5 bar
R412010774		-1 ... 0 bar	5 bar
R412010763		-1 ... 1 bar	5 bar
R412010762		-1 ... 1 bar	5 bar
R412010771		0 ... 6 bar	15 bar
R412010770		0 ... 6 bar	15 bar
R412010765		0 ... 6 bar	15 bar
R412010764		0 ... 6 bar	15 bar
R412010777		0 ... 6 bar	15 bar
R412010776		0 ... 6 bar	15 bar
R412010773		0 ... 10 bar	15 bar
R412010772		0 ... 10 bar	15 bar
R412010767		0 ... 10 bar	15 bar
R412010766		0 ... 10 bar	15 bar
R412010779		0 ... 10 bar	15 bar
R412010778		0 ... 10 bar	15 bar
R412010782		0 ... 12 bar	16 bar
R412010781		0 ... 12 bar	16 bar
R412010806		0 ... 12 bar	16 bar
R412010805		0 ... 12 bar	16 bar
R412026774		-1 ... 10 bar	15 bar

Part No.	Output signal Analog
R412010761	-
R412010760	-
R412010769	0 - 10 V DC-4 ... 20 mA
R412010768	0 - 10 V DC-4 ... 20 mA
R412010775	-
R412010774	-
R412010763	-
R412010762	-
R412010771	0 - 10 V DC-4 ... 20 mA
R412010770	0 - 10 V DC-4 ... 20 mA
R412010765	-
R412010764	-
R412010777	-
R412010776	-
R412010773	0 - 10 V DC-4 ... 20 mA
R412010772	0 - 10 V DC-4 ... 20 mA
R412010767	-
R412010766	-

Part No.	Output signal
	Analog
R412010779	-
R412010778	-
R412010782	-
R412010781	-
R412010806	-
R412010805	-
R412026774	0 - 10 V DC-4 ... 20 mA

Part No.	Output signal	Input signal
	digital	digital
R412010761	2 x PNP, NPN, Push-pull	-
R412010760	2 x PNP, NPN, Push-pull	-
R412010769	PNP, NPN, Push-pull	-
R412010768	PNP, NPN, Push-pull	-
R412010775	PNP, NPN, push-pull, 1x IO-Link	-
R412010774	PNP, NPN, push-pull, 1x IO-Link	-
R412010763	2 x PNP, NPN, Push-pull	-
R412010762	2 x PNP, NPN, Push-pull	-
R412010771	PNP, NPN, Push-pull	-
R412010770	PNP, NPN, Push-pull	-
R412010765	2 x PNP, NPN, Push-pull	-
R412010764	2 x PNP, NPN, Push-pull	-
R412010777	PNP, NPN, push-pull, 1x IO-Link	-
R412010776	PNP, NPN, push-pull, 1x IO-Link	-
R412010773	PNP, NPN, Push-pull	-
R412010772	PNP, NPN, Push-pull	-
R412010767	2 x PNP, NPN, Push-pull	-
R412010766	2 x PNP, NPN, Push-pull	-
R412010779	PNP, NPN, push-pull, 1x IO-Link	-
R412010778	PNP, NPN, push-pull, 1x IO-Link	-
R412010782	2 x PNP, NPN, Push-pull	-
R412010781	2 x PNP, NPN, Push-pull	-
R412010806	PNP, NPN, push-pull, 1x IO-Link	-
R412010805	PNP, NPN, push-pull, 1x IO-Link	-
R412026774	2x PNP, NPN, push-pull in standard mode, 1x in leakage mode	1 x PNP

Part No.	electrical connections	Compressed air connection	Fig.	
R412010761	Plug, M12x1, 4-pin	Internal thread, G 1/4	Fig. 1	-
R412010760	Plug, M12x1, 4-pin	push-in fitting, Ø 4	Fig. 2	-
R412010769	Plug, M12x1, 4-pin	Internal thread, G 1/4	Fig. 1	-
R412010768	Plug, M12x1, 4-pin	push-in fitting, Ø 4	Fig. 2	-
R412010775	Plug, M12x1, 4-pin	Internal thread, G 1/4	Fig. 1	1)
R412010774	Plug, M12x1, 4-pin	push-in fitting, Ø 4	Fig. 2	1)
R412010763	Plug, M12x1, 4-pin	Internal thread, G 1/4	Fig. 1	-
R412010762	Plug, M12x1, 4-pin	push-in fitting, Ø 4	Fig. 2	-
R412010771	Plug, M12x1, 4-pin	Internal thread, G 1/4	Fig. 1	-
R412010770	Plug, M12x1, 4-pin	push-in fitting, Ø 4	Fig. 2	-
R412010765	Plug, M12x1, 4-pin	Internal thread, G 1/4	Fig. 1	-

Part No.	electrical connections	Compressed air connection	Fig.	
R412010764	Plug, M12x1, 4-pin	push-in fitting, Ø 4	Fig. 2	-
R412010777	Plug, M12x1, 4-pin	Internal thread, G 1/4	Fig. 1	1)
R412010776	Plug, M12x1, 4-pin	push-in fitting, Ø 4	Fig. 2	1)
R412010773	Plug, M12x1, 4-pin	Internal thread, G 1/4	Fig. 1	-
R412010772	Plug, M12x1, 4-pin	push-in fitting, Ø 4	Fig. 2	-
R412010767	Plug, M12x1, 4-pin	Internal thread, G 1/4	Fig. 1	-
R412010766	Plug, M12x1, 4-pin	push-in fitting, Ø 4	Fig. 2	-
R412010779	Plug, M12x1, 4-pin	Internal thread, G 1/4	Fig. 1	1)
R412010778	Plug, M12x1, 4-pin	push-in fitting, Ø 4	Fig. 2	1)
R412010782	Plug, M12x1, 4-pin	Internal thread, G 1/4	Fig. 1	-
R412010781	Plug, M12x1, 4-pin	push-in fitting, Ø 4	Fig. 2	-
R412010806	Plug, M12x1, 4-pin	Internal thread, G 1/4	Fig. 1	1)
R412010805	Plug, M12x1, 4-pin	push-in fitting, Ø 4	Fig. 2	1)
R412026774	Plug, M12x1, 5-pin	Internal thread, G 1/4	Fig. 3	2)

1) The IO-Link device description (IODD) for the PE5 pressure sensor is available for download in the Media Centre.

2) Suitable for leak tests

Technical information

Alternative pressure connection (G1/4) on the rear side (closed with plug)
Display color selectable, red or green

Technical information

Material	
Housing	Polycarbonate
Seals	Acrylonitrile butadiene rubber
Blanking plug	Polyoxymethylene
Electr. connection	Aluminum, black anodized

Dimensions

Fig. 1

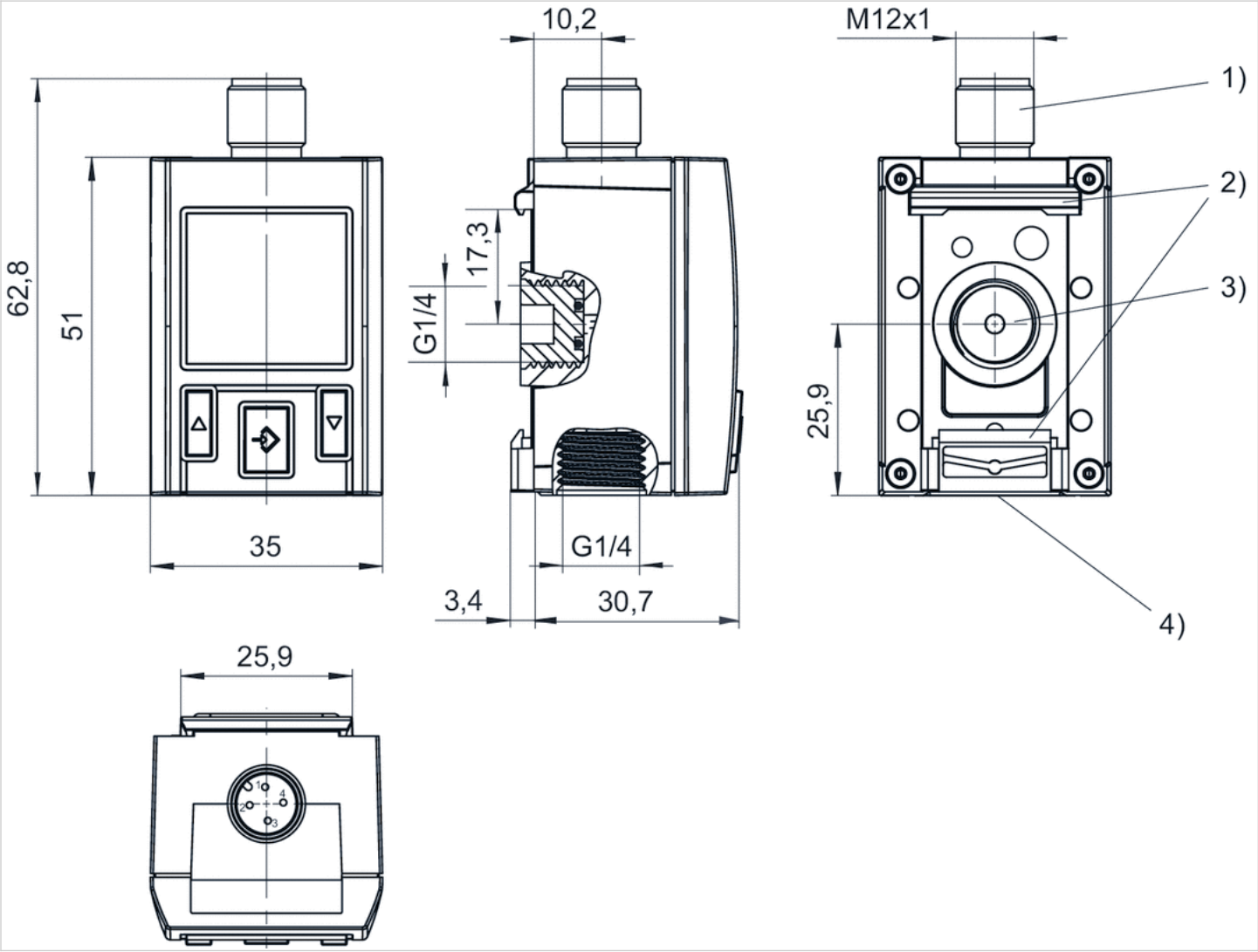

1) M12x1 electrical connection
2) Mounting for hat rail and wall mounting
3) Alternative pressure connection (G1/4) closed with plug
4) Pressure connection G1/4

Fig. 2

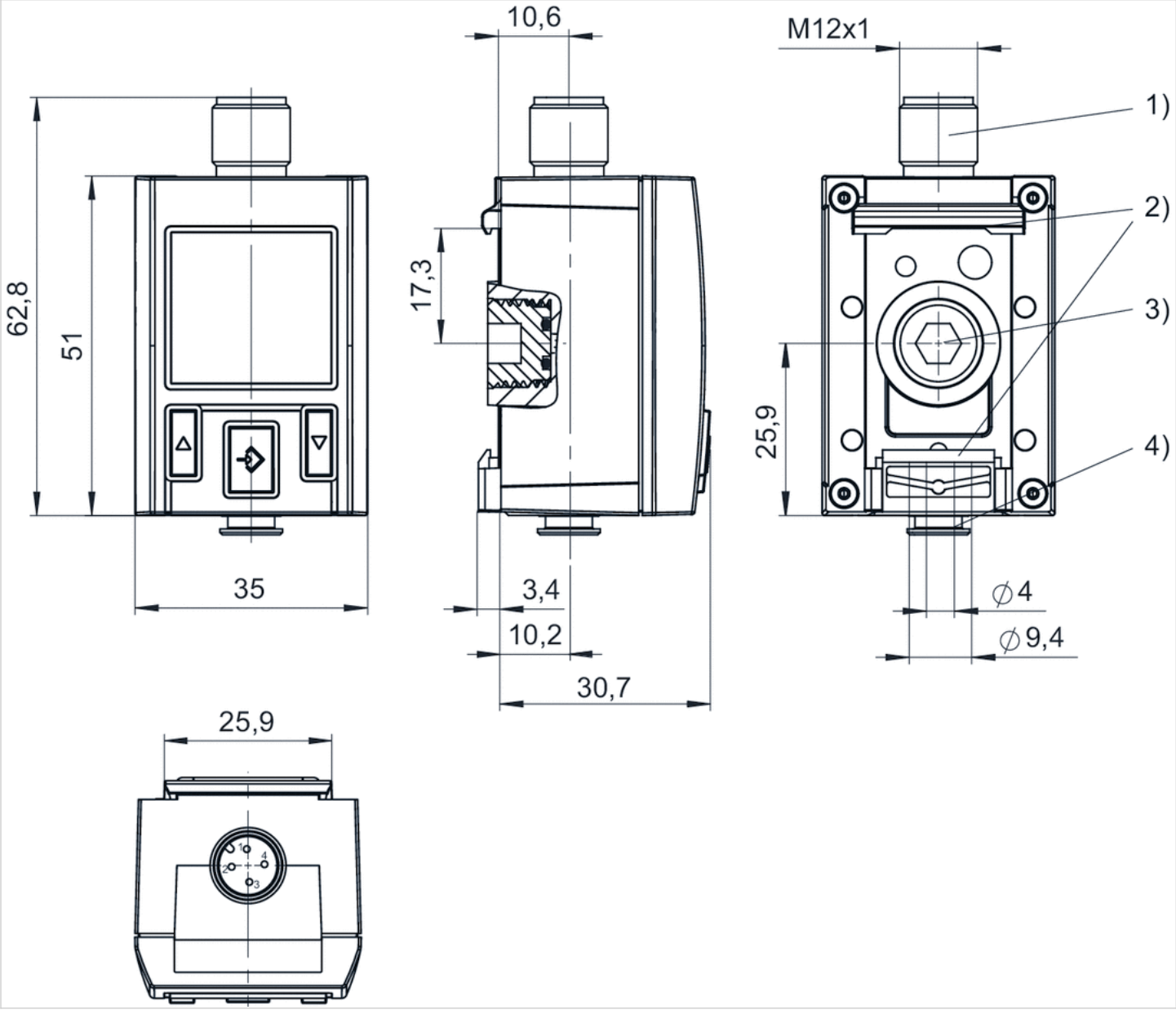

1) M12x1 electrical connection
2) Mounting for hat rail and wall mounting
3) Alternative pressure connection (G1/4) closed with plug
4) Pressure connection, tubing Ø 4 mm

Fig. 3, Electr. connection for leak test

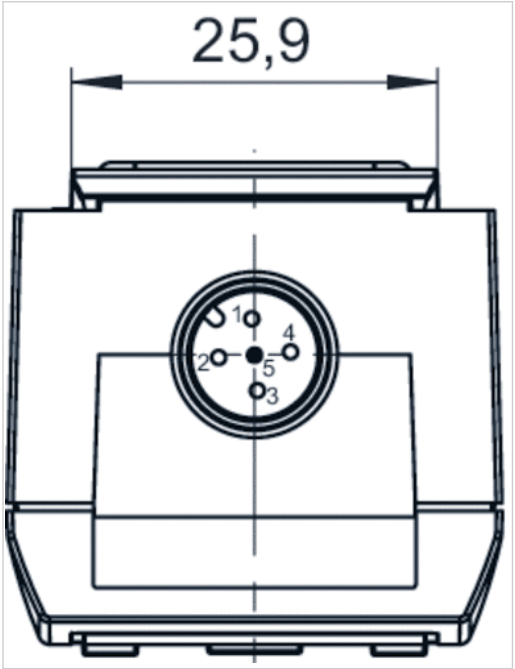

Display and operation area

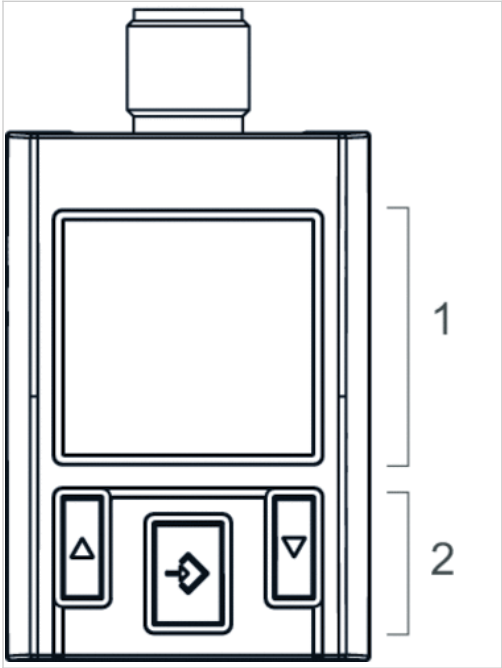

1) LCD display
2) Control panel with 3 buttons

Diagrams

Operating mode, PNP

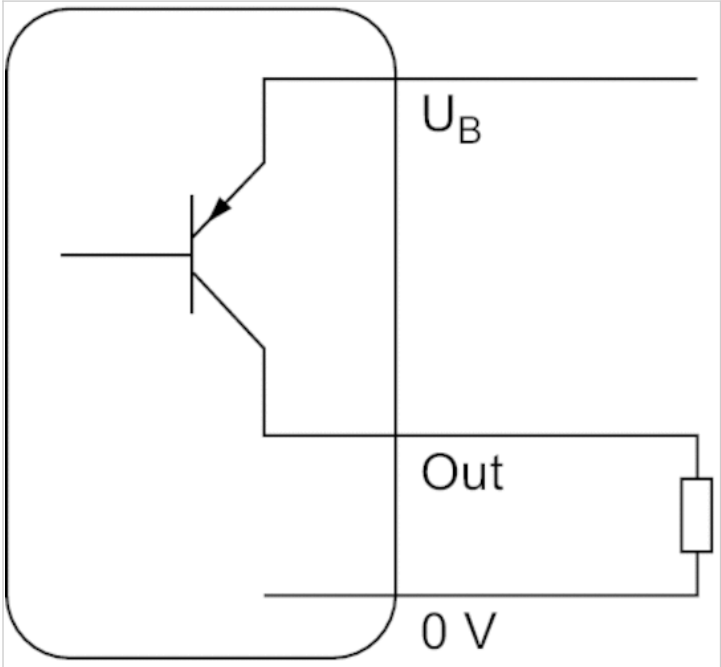

Operating mode, NPN

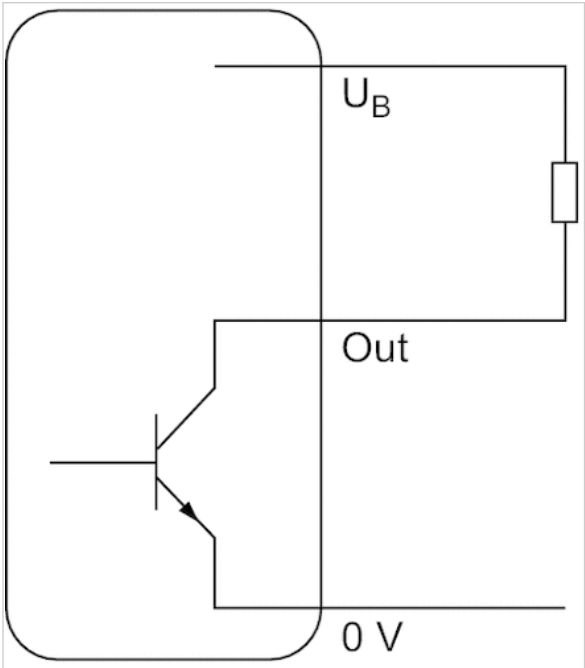

Operating mode, Push-pull

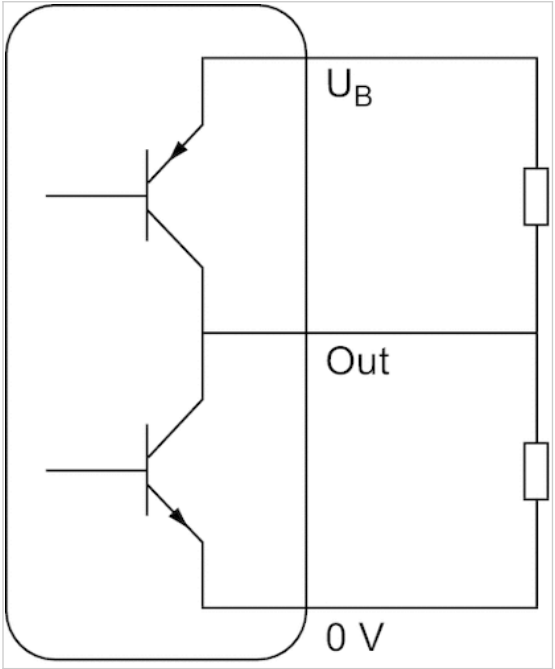

Hysteresis function: switching and resetting behavior dependent on pressure p and time t, in case of overpressure

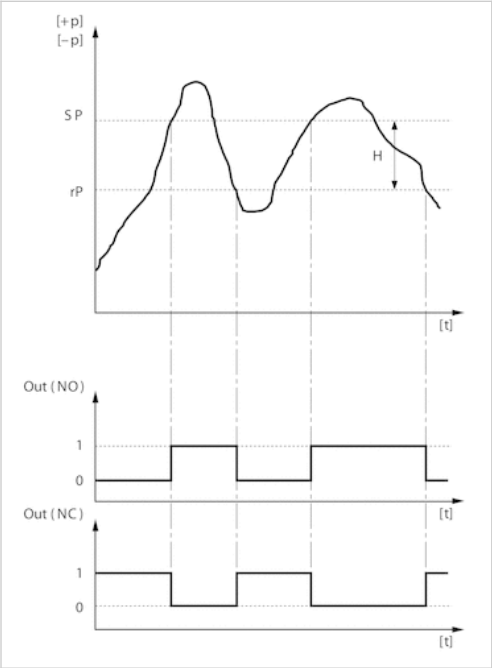

H: Hysteresis
SP = switching point
RP = resetting point
Out (NC): switch output, break contact
Out (NO): switch output, make contact

Hysteresis function: switching and resetting behavior dependent on pressure p and time t, in case of underpressure

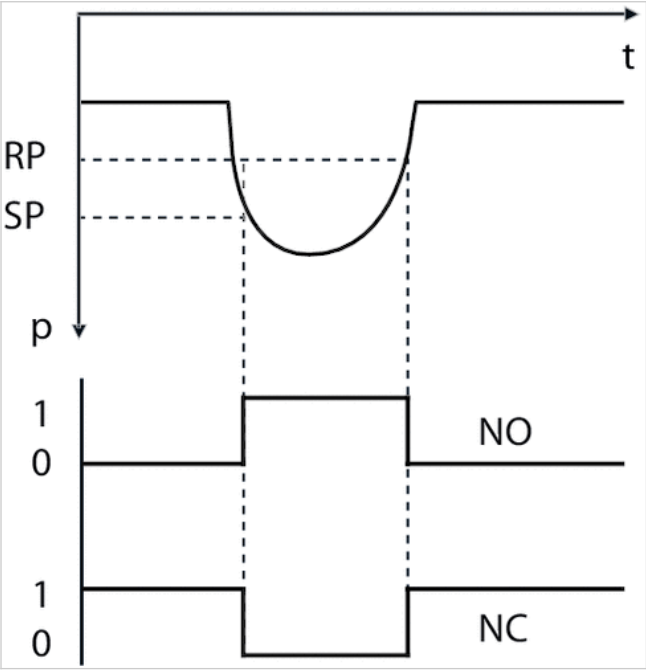

Delayed hysteresis function: switching and resetting behavior depending on pressure p and time t

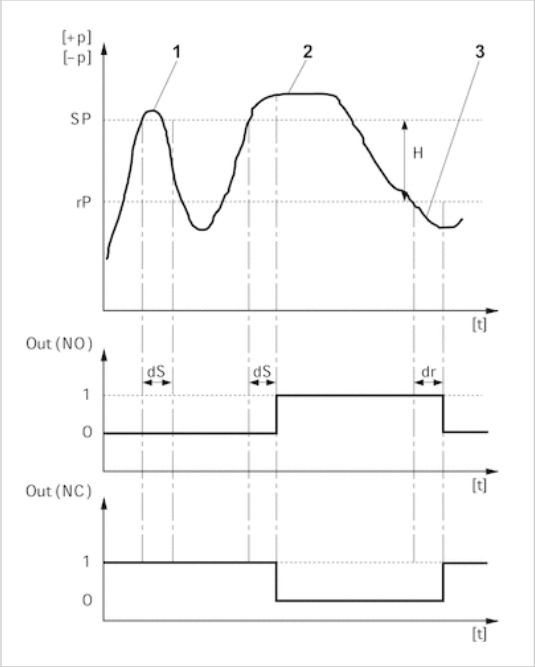

H: Hysteresis
SP = switching point
RP = resetting point
Out (NC): switch output, break contact
Out (NO): switch output, make contact
dS: switching delay
dR = reset delay
1) period of pressure over the switching point dS: pressure sensor does not switch
2) Period of pressure over the switching point > dS: pressure sensor switches
3) Period of pressure under the resetting point > dR: pressure sensor switches

Window function: switching and resetting behavior depending on pressure p and time t

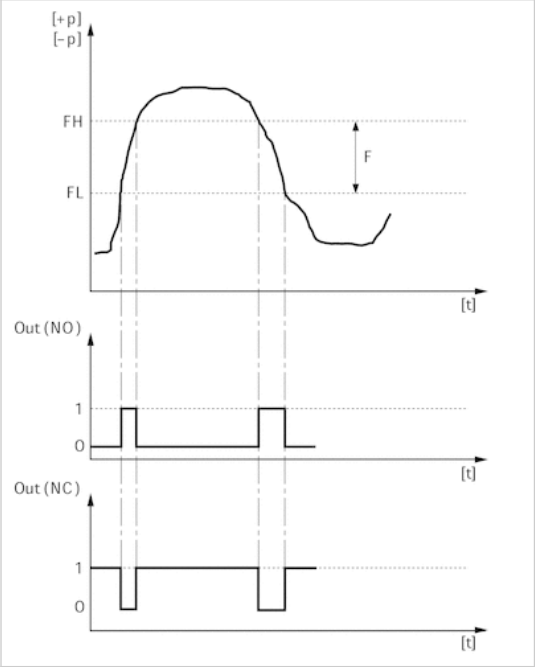

FH: pressure band, upper value
FL: pressure band, lower value
Out (NC): switch output, break contact
Out (NO): switch output, make contact

Leakage characteristic

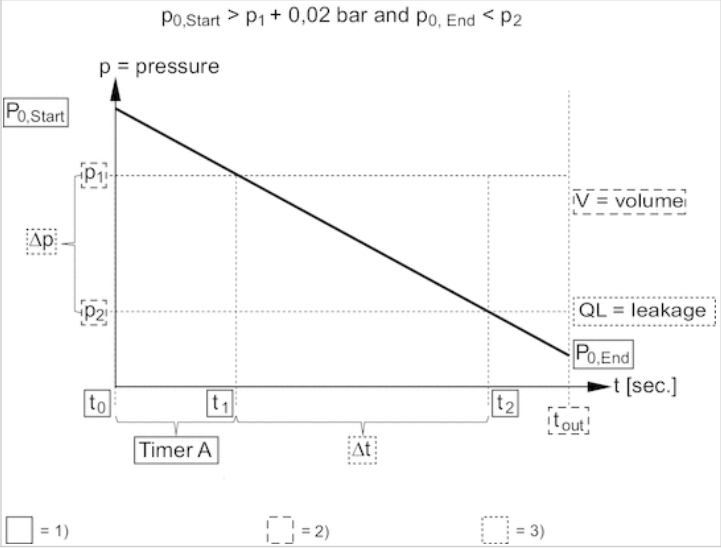

1) Internally stored parameter
2) Adjustable parameter
3) Output value

Circuit diagram

Block diagram, 1x PNP and 1x analog

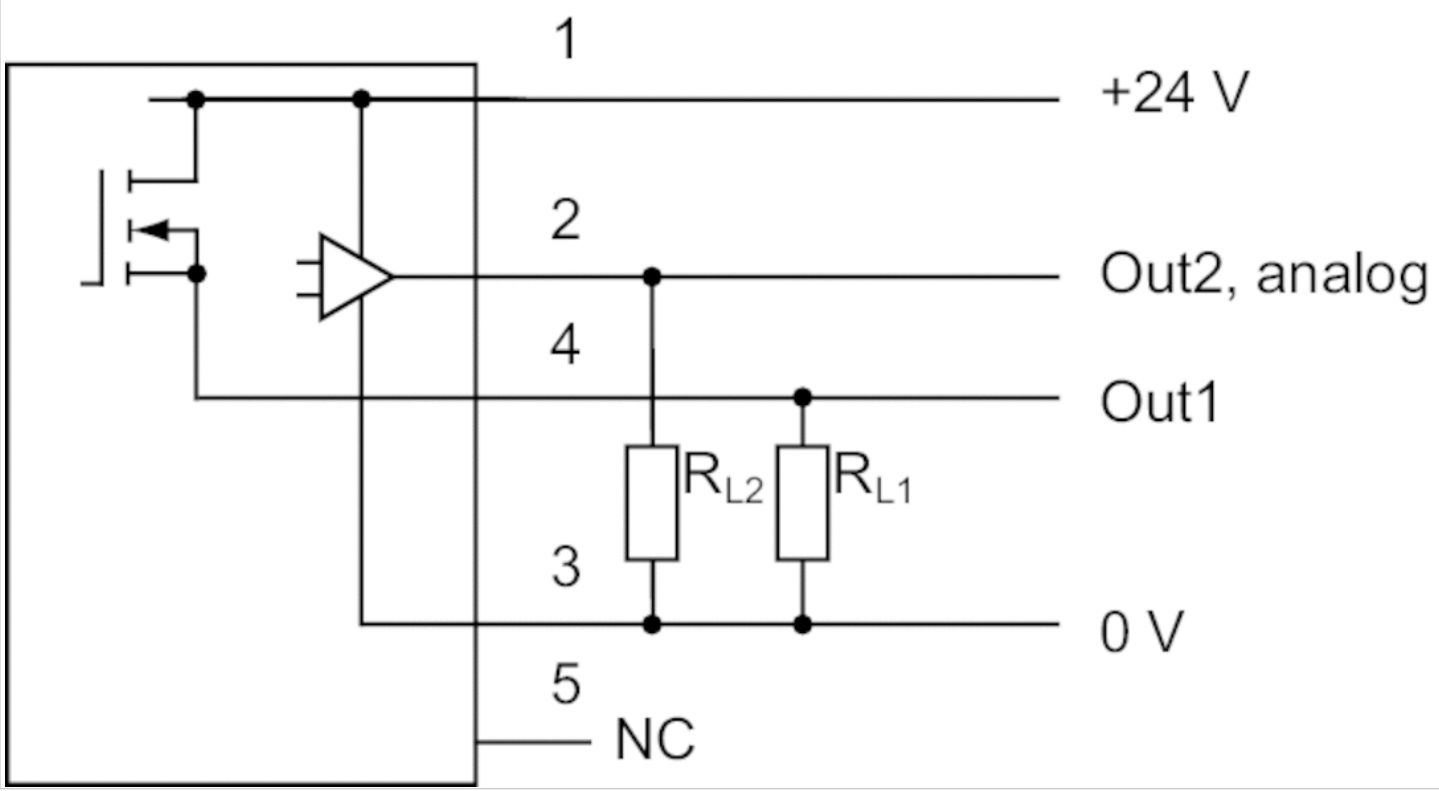

RL = storable postion

Block diagram, 1x NPN and 1x analog

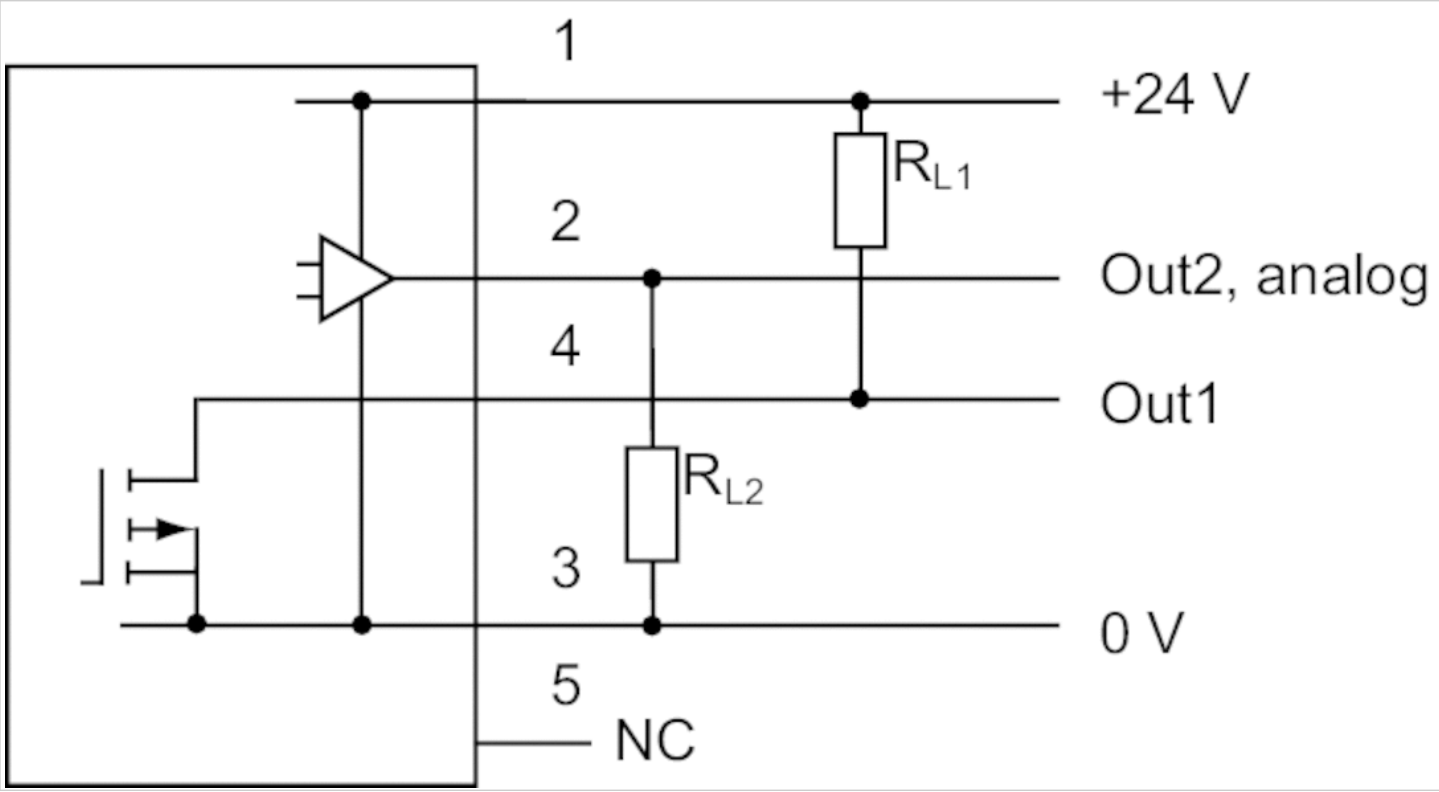

RL = storable postion

Pin assignments

Pin assignments, M12x1, 4-pin

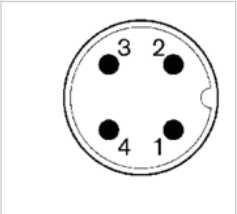

Pin	1
Allocation	operational voltage + UB

2	3
switch output Out2, analog: A or V, digital: PNP, NPN, push-pull	0 V

4
switch output Out1, digital: PNP, NPN, push-pull

Pin assignments

Pin assignments, M12x1, 5-pin

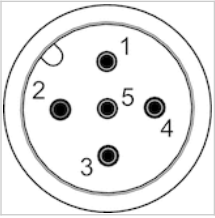

Pin	1	2	3
Allocation	Supply Voltage	Switch output PNP/NPN/push-pull, switchable	0 V

4
Switch output PNP/NPN/push-pull/leakage mode, digital switch input PNP

5
Analog output (0 to 10 V DC, 4 to 20 mA)

Double nipple, Series PE5

- External thread

Weight per piece 0.04 kg

Technical data

Part No.	Port G	Port D	Delivery unit
R412010015	G 1/4	G 1/8	2 piece
R412010016	G 1/4	G 1/4	2 piece

Dimensions

Dimensions

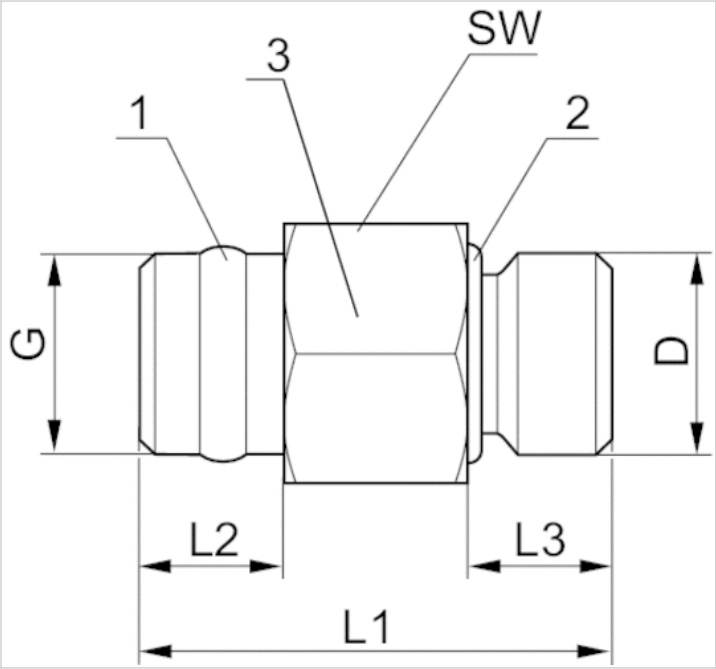

1) sealing ring Polytetrafluorethylen
2) O-ring - acrylonitrile butadiene rubber
3) Housing - brass, nickel-plated

Dimensions

Part No.	Port G	Port D	L1	L2	L3	SW
R412010015	G 1/4	G 1/8	30	10	8.5	17
R412010016	G 1/4	G 1/4	30	10	8.5	17

Round plug connector, Series CON-RD

- Socket M12x1 5-pin A-coded angled 90°
- open cable ends
- for DeviceNet
- with cable
- unshielded

Ambient temperature min./max.	-40 ... 85 °C
Operational voltage	48 V AC/DC
Protection class	IP65
Wire cross-section	0.34 mm²
Weight	See table below

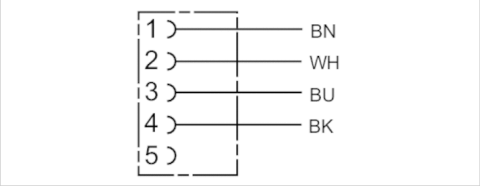

Technical data

Part No.	Max. current	Number of wires	Cable-Ø	Cable length	Weight
1834484259	4 A	4	5.2 mm	3 m	0.126 kg
1834484260	4 A	4	5.2 mm	5 m	0.195 kg
1834484261	4 A	4	5.2 mm	10 m	0.38 kg

Technical information

The specified protection class is only valid in assembled and tested state.

Technical information

Material	
Cable sheath	Polyurethane

Dimensions

Dimensions

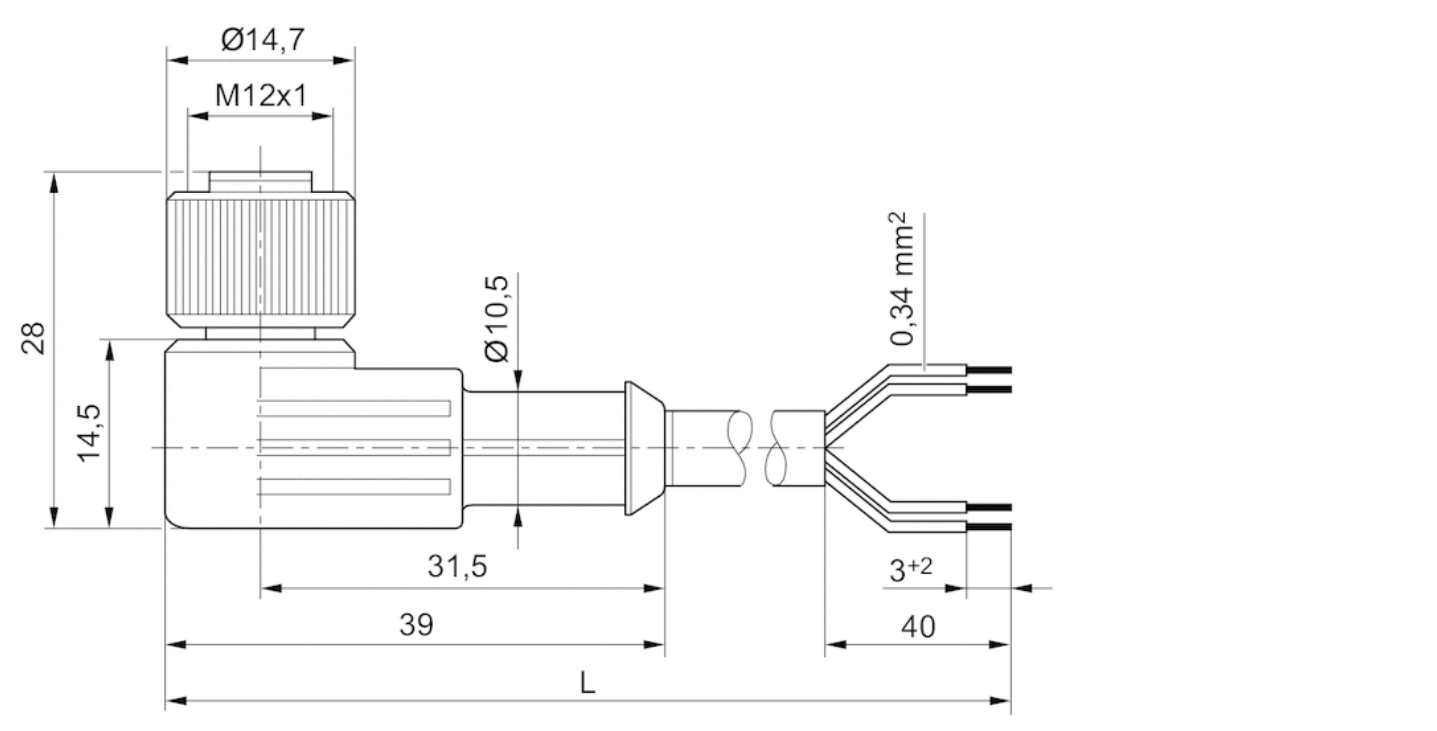

L = length

Pin assignments

Pin assignment, socket

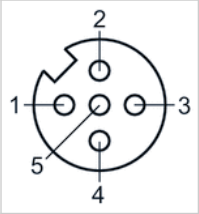

(1) BN=brown
(2) WH=white
(3) BU=blue
(4) BK=black
(5) not assigned

Round plug connector, Series CON-RD

- Socket M12x1 5-pin A-coded angled 90°
- open cable ends
- with cable
- shielded

Ambient temperature min./max.	-25 ... 80 °C
Operational voltage	48 V AC/DC
Protection class	IP67
Wire cross-section	0.34 mm²
Weight	See table below

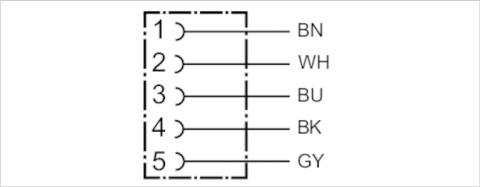

Technical data

Part No.	Max. current	Number of wires	Cable-Ø	Cable length	Weight
R419800109	4 A	5	6 mm	2.5 m	0.145 kg
R419800110	4 A	5	6 mm	5 m	0.27 kg
R419800546	4 A	5	6 mm	10 m	0.514 kg

Technical information

Material	
Housing	Thermoplastic elastomer
Cable sheath	Polyurethane

Dimensions

Dimensions

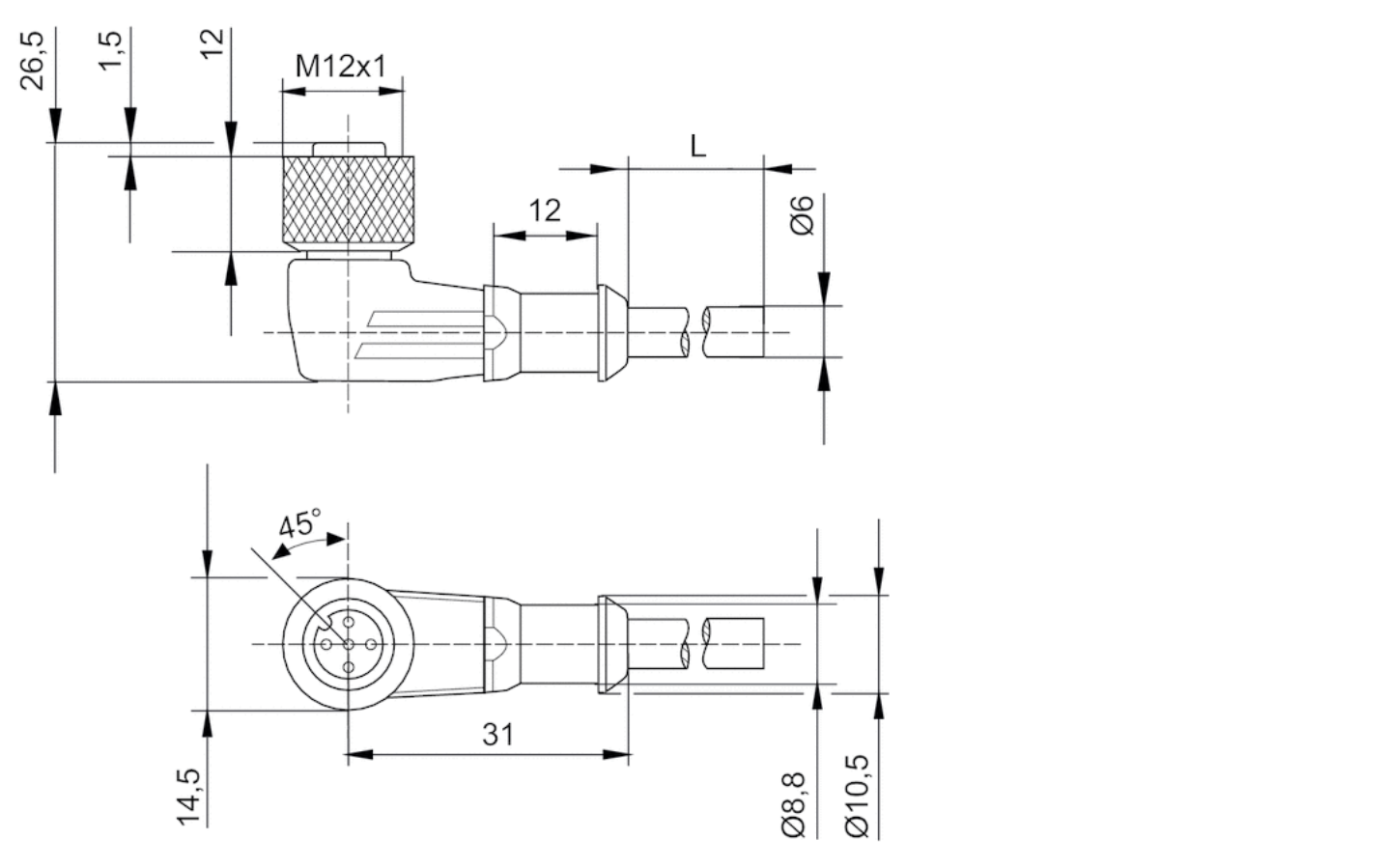

L = length

Pin assignments

Pin assignment, socket

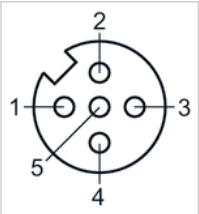

(1) BN=brown
(2) WH=white
3) BU=blue
(4) BK=black
(5) GY=grey

Double nipple

- External thread
- G 1/4
- External thread
- G 1/8 G 1/4
- FPT-S-RDO

Working pressure min./max.	0 ... 16 bar
Ambient temperature min./max.	-20 ... 80 °C

Technical data

Part No.	Port G	Port D	Delivery unit
1823391016	G 1/4	G 1/8	10 piece
1823391017	G 1/4	G 1/4	10 piece

Technical information

Material	
Material	Brass, nickel-plated
Seal	Polyvinyl chloride, hard

Dimensions

Dimensions

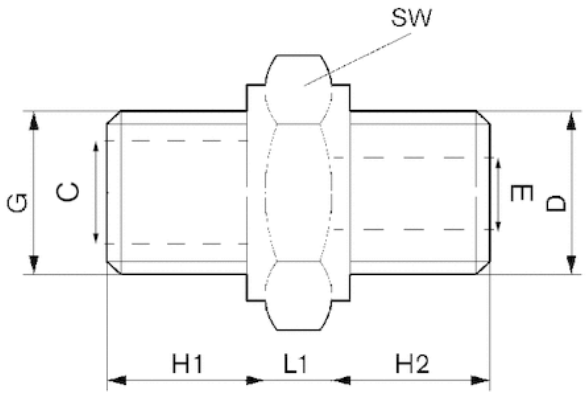

Dimensions

Part No.	Port D	Port G	ØC	ØE	H1	H2	L1	SW
1823391016	G 1/8	G 1/4	8	5	10	7	5	17
1823391017	G 1/4	G 1/4	8	7.5	10	10	5	17

Wall mounting and hat rail

- for PE5

Weight	0.004 kg

Technical data

Part No.	Delivery unit
R412010405	1 piece

Screws included in scope of delivery: 2 x M5x20, DIN EN ISO 4762

Technical information

Material	
Housing	Polyamide

Dimensions

Dimensions

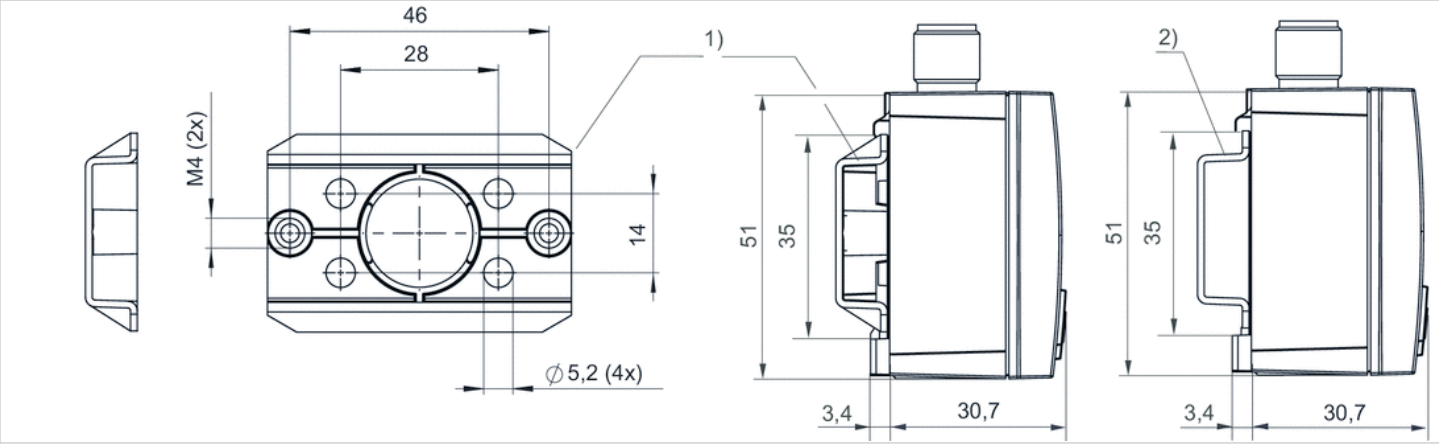

1) Wall mounting
2) DIN rail

Control panel installation kit

- for PE5

Ambient temperature min./max. 0 ... 60 °C

Technical data

Part No.	Delivery unit
R412010406	1 piece

Technical information

Material	
Housing	Acrylonitrile butadiene styrene
Seal	Polyurethane

Dimensions

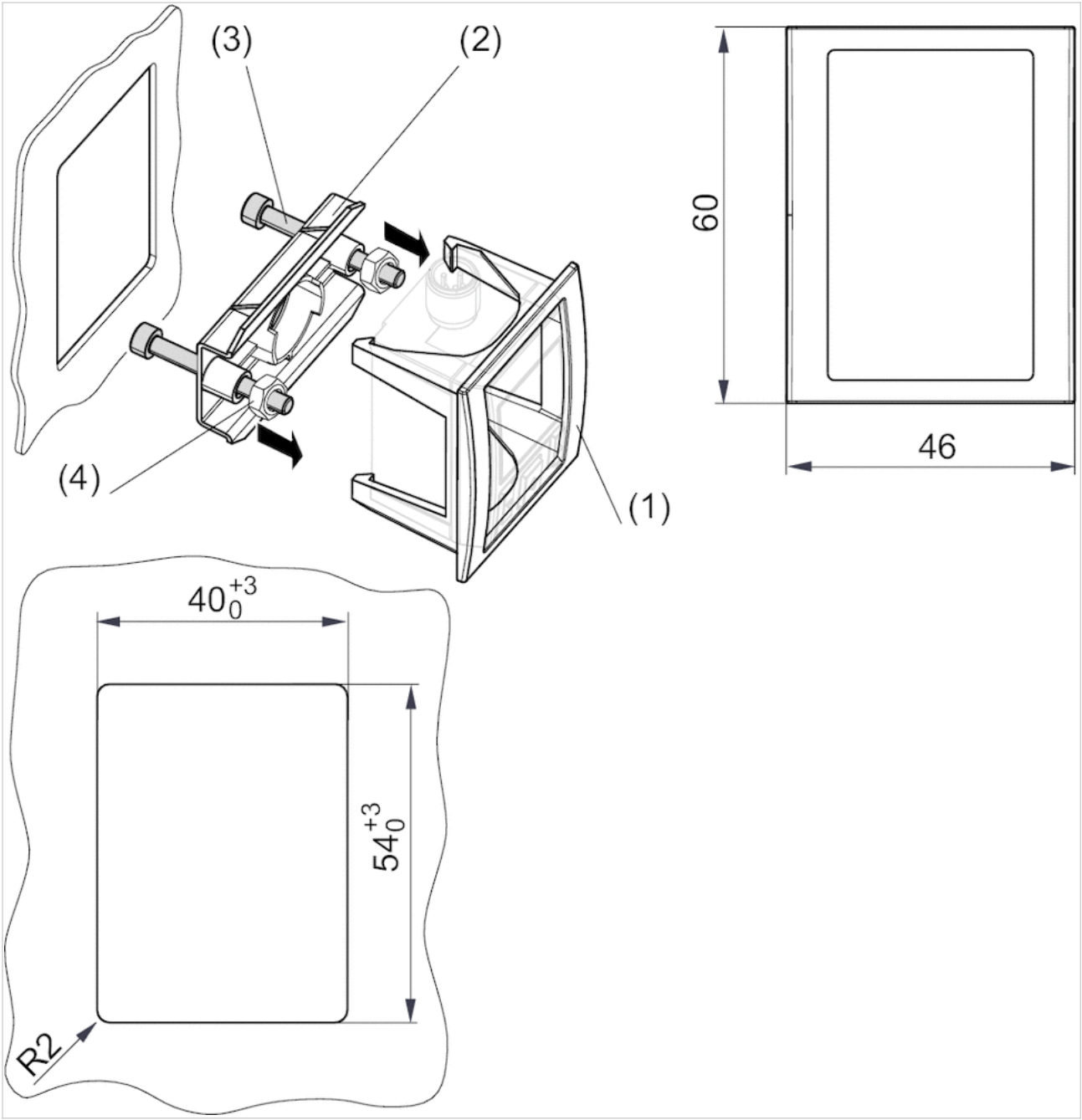

1 front frame (1), 1 wall mounting (2), 2 attachment screws M4x40 (3), 2 hexagonal nuts (4)
Panel plate thickness max. 5.0 mm

+34 943 377 740 | info@diprax.es | www.diprax.es

Polígono Industrial Belartza, Gurutzegi Kalea, 17 Pab. D4 y D5, 20018 San Sebastián-Donostia