DIPRAX
PROYECTOS Y AUTOMATISMOS GENERALES

SENSOR DE CAUDAL
SERIE AF2

www.diprax.es

El sensor de caudal inteligente para optimizar la eficiencia energética

Sensor de caudal de la serie AF2 apto para la industria 4.0

- El gran margen de medición y el sensor de medición de presión integrado permiten un amplio espectro de funcionamiento
- Salidas de conmutación y analógicas configurables de forma variable e individual
- Amplias posibilidades de comunicación mediante IO-Link o interfaz Ethernet
- Gran pantalla OLED para la mejor legibilidad
- Elevada flexibilidad en la integración en instalaciones
- Montaje y manipulación sencillos
- Para el montaje en unidades de mantenimiento (configurable) o como combinación de sensor/filtros

AVENTICS™

EMERSON™

Así siempre tendrá el caudal del aire bajo control

El nuevo sensor de caudal de la serie AF2 controla el consumo de aire en sistemas neumáticos y permite una intervención rápida al detectar fugas. Le ayuda a optimizar el consumo energético, a evitar averías en la máquina y a reducir los costes.

Más eficiencia energética, menores costes

Para ello, el AF2 no solo determina el caudal, sino también la presión actual en la alimentación y así permite un diagnóstico ampliado de los parámetros de funcionamiento de la instalación. Los datos se transfieren al control o bien mediante salidas analógicas o de conmutación tradicionales o mediante IO-Link. Para ello existe la posibilidad de comunicar datos directamente mediante la interfaz Ethernet. Se puede enviar información sobre el consumo energético actual o acumulado directamente a los correspondientes sistemas de rango superior sin tener que incluir al control de la máquina. Por tanto, el AF2 es un verdadero componente de la industria 4.0.

Los intervalos de caudal de las variantes AF2 están adaptados de forma óptima a nuestras unidades de mantenimiento de la familia AS y se pueden configurar correspondientemente. Naturalmente también se pueden usar la combinación de sensor/filtros de forma individual. La gran pantalla OLED configurable proporciona todos los datos operativos de forma clara e inequívoca. También son posibles distintas recomendaciones de los valores de medición como curvas de desarrollo y valores acumulativos.

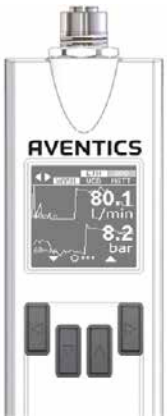

1 | Montaje directo Unidad de mantenimiento
2 | Con juego de montaje de soporte (Filtro 5 µm)

Serie	AF2
Gama de presión	0 ... 16 bar
Rangos de caudal	5 l/min...1.060 l/min* /...1.590 l/min ** 8 l/min...1.630 l/min* /...2.445 l/min** 22 l/min...4.326 l/min* /...6.490 l/min**
Comunicación	Industrial: IO-Link, 2 salidas analógicas, 2 de conmutación, 1 de frecuencia-, 1 de impulsos (configurable) Ethernet: Webserver/OPC UA/MQTT
Precisión de medición	+/- 3 % del valor de F20medición + 0,3 % del margen de medición del valor final* +/- 8 % del valor de medición + 1 % del margen de medición del valor final **
Precisión de repetición	± 1,5% del valor de medición
Rango de temperatura	-20 °C ... +60 °C
Tensión de servicio	17 a 30 V DC
Tipo de protección	IP65 e IP67 (EN 60529) con cable de conexión permitido

* rango de medición estándar
** rango de medición ampliado

AVENTICS™

AVENTICS Spain, S.L. Sant Cugat del Valles www.aventics.com/es info.es@aventics.com
R500000659/2019-05/ES Reservado el derecho a realizar modificaciones. Impreso en Alemania.

EMERSON™

CONSIDER IT SOLVED™

Flow sensor, IO-Link, Series AF2

- 2 analog outputs, 2 switch outputs, 1 frequency output, 1 pulse output, IO-Link, With mounting
- Flow measuring principle: calorimetric
- Qn min. 5 l/min
- Qn max. 1590 l/min
- Electrical connection Plug, M12x1, 5-pin

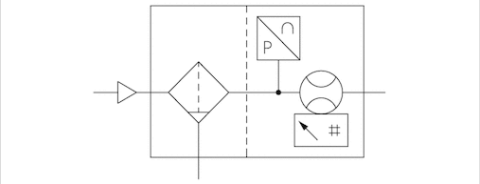

Certificates	CE declaration of conformity, RoHS
Working pressure min./max.	0 ... 16 bar
Ambient temperature min./max.	-20 ... 60 °C
Medium temperature min./max.	-20 ... 60 °C
Medium	Compressed air, Argon, Nitrogen, Helium, Carbon dioxide
filter porosity	5 µm
Display	OLED
Flow display unit	l/sec, l/min, m³/min, m³/h, ft³/s, m³/min
Pressure display unit	bar, psi
Temperature display unit	°C, °F
DC operating voltage min.	17 V DC
DC operating voltage max.	30 V DC
Max. power consumption *)	175 mA
Response time	10 ms
Protection class	IP65, IP67 according to IEC 60529
Short circuit resistance	short circuit resistant
Shock resistance max.	30 g, 11 ms
Vibration resistance	1 g (10 - 2000 Hz) IEC 60068 - 2-6
Reproducibility	± 1.5% of the measured value
Weight	1,23 kg
*)	Current consumption without load The delivered product may vary from that in the illustration.

Technical data

Part No.	for series	Compressed air connection	Nominal flow Qn	Nominal flow Qn	Nominal flow Qn
			Min., standard	Max., standard	Min., extended
R412026834	AS2	G 3/8	5 l/min	1060 l/min	1060 l/min

Part No.	Nominal flow Qn
	Max., extended
R412026834	1590 l/min

Standard measurement range for flow measurement: compressed air 0.5 ... 100 m/s, extended measurement range: compressed air >100 ... 150 m/s, in accordance with ISO 8778, Flow display range: 0 ... 3180 l/min

Technical information

The pressure dew point must be at least 15 °C under ambient and medium temperature and may not exceed 3 °C .
The protection class is only ensured when the plug is mounted properly. For detailed information, see operating instructions.
The device is designed to be installed in AS series air preparation units or to be fitted as a stand-alone device using a W05 block assembly kit.
Liquid oil or water must be separated via prefiltering. If it is not separated sufficiently, drifting may result.
Precision- Standard measurement range: ±3% of measured value, + 0.3% of final value- Extended measurement range: ±8% of measured value, + 1% of final value
The IO-Link device description (IODD) for the AF2 flow rate sensor is available for download in the Media Center.

Technical information

Material	
Housing	Polyamide, Polycarbonate
Seals	Fluorocaoutchouc

Dimensions

Dimensions in mm

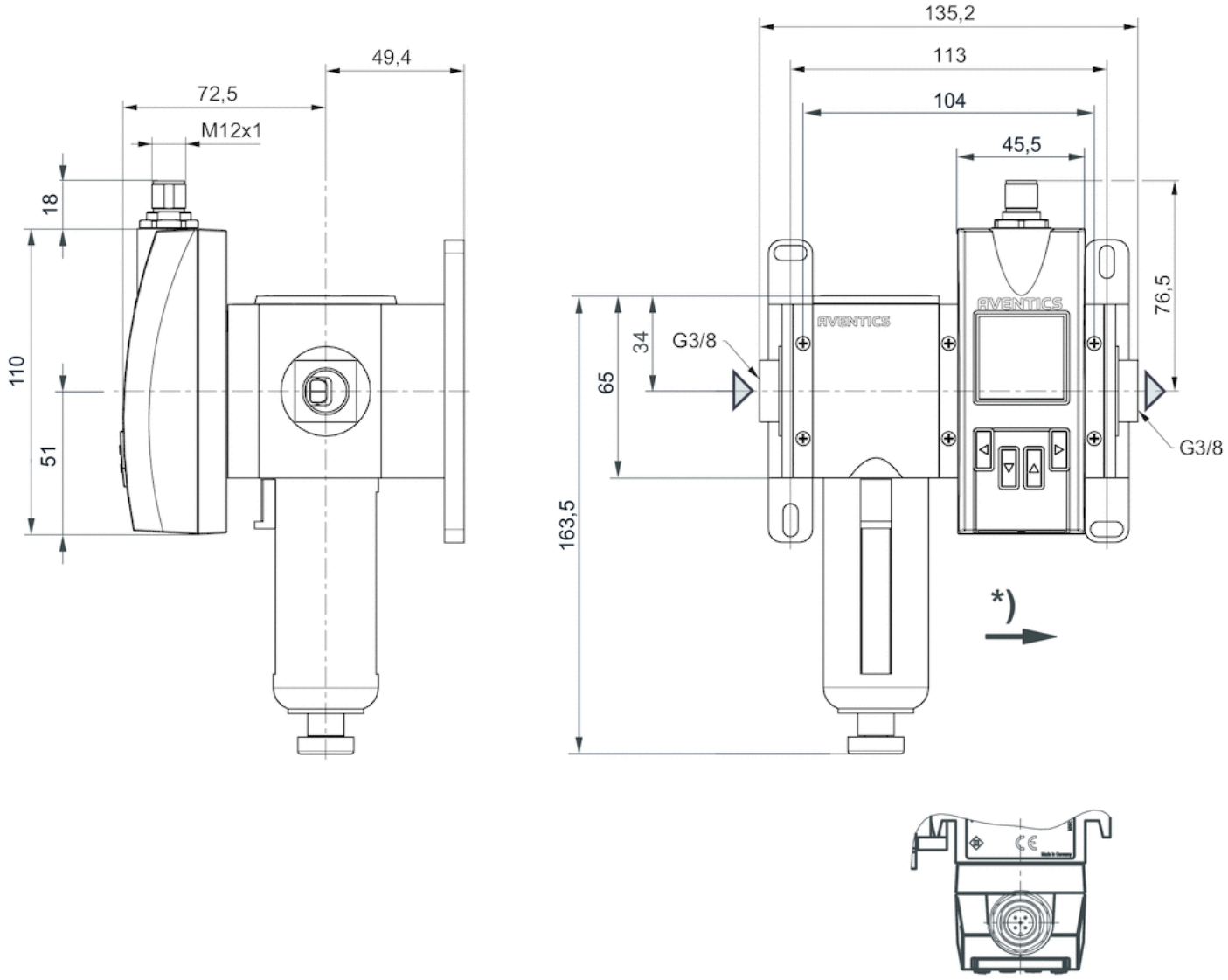

* Flow direction

Pin assignments

Pin assignments, M12x1, 5-pin

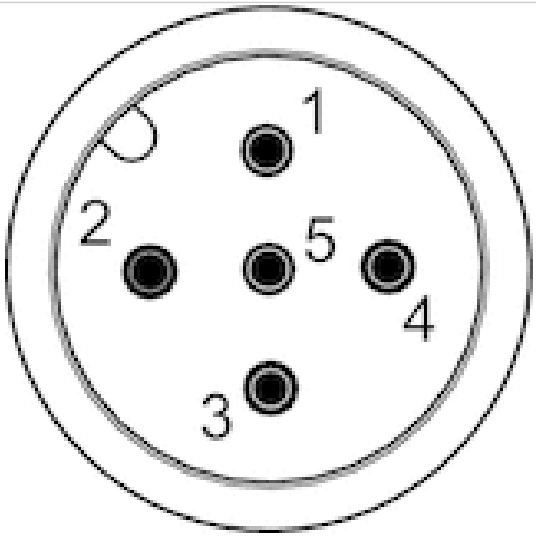

Pin	1	2	3
Allocation	L+	QA (output 4 ... 20 mA)	m = mass

4	5
C/Q1 (IO-Link/switch output)	Analog output 4 ... 20 mA

Flow sensor, IO-Link, Series AF2

- 2 analog outputs, 2 switch outputs, 1 frequency output, 1 pulse output, IO-Link, With mounting
- Flow measuring principle: calorimetric
- Qn min. 8 l/min
- Qn max. 2445 l/min
- Electrical connection Plug, M12x1, 5-pin

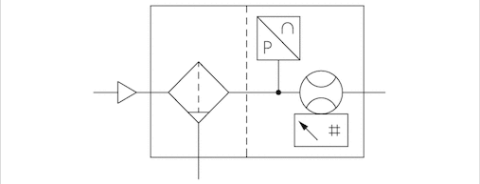

Certificates	CE declaration of conformity, RoHS
Working pressure min./max.	0 ... 16 bar
Ambient temperature min./max.	-20 ... 60 °C
Medium temperature min./max.	-20 ... 60 °C
Medium	Compressed air, Argon, Nitrogen, Helium, Carbon dioxide
filter porosity	5 µm
Display	OLED
Flow display unit	l/sec, l/min, m³/min, m³/h, ft³/s, m³/min
Pressure display unit	bar, psi
Temperature display unit	°C, °F
DC operating voltage min.	17 V DC
DC operating voltage max.	30 V DC
Max. power consumption *)	175 mA
Response time	10 ms
Protection class	IP65, IP67 according to IEC 60529
Short circuit resistance	short circuit resistant
Shock resistance max.	30 g, 11 ms
Vibration resistance	1 g (10 - 2000 Hz) IEC 60068 - 2-6
Reproducibility	± 1.5% of the measured value
Weight	1,97 kg
*)	Current consumption without load

Technical data

Part No.	for series	Compressed air connection	Nominal flow Qn	Nominal flow Qn	Nominal flow Qn
			Min., standard	Max., standard	Min., extended
R412026835	AS3	G 1/2	8 l/min	1630 l/min	1630 l/min

Part No.	Nominal flow Qn
	Max., extended
R412026835	2445 l/min

Standard measurement range for flow measurement: compressed air 0.5 ... 100 m/s, extended measurement range: compressed air >100 ... 150 m/s, in accordance with ISO 8778, Flow display range: 0 ... 4890 l/min

Technical information

The pressure dew point must be at least 15 °C under ambient and medium temperature and may not exceed 3 °C .
The protection class is only ensured when the plug is mounted properly. For detailed information, see operating instructions.
The device is designed to be installed in AS series air preparation units or to be fitted as a stand-alone device using a W05 block assembly kit.
Liquid oil or water must be separated via prefiltering. If it is not separated sufficiently, drifting may result.
Precision- Standard measurement range: ±3% of measured value, + 0.3% of final value- Extended measurement range: ±8% of measured value, + 1% of final value
The IO-Link device description (IODD) for the AF2 flow rate sensor is available for download in the Media Center.

Technical information

Material	
Housing	Polyamide, Polycarbonate
Seals	Fluorocaoutchouc

Dimensions

Dimensions in mm

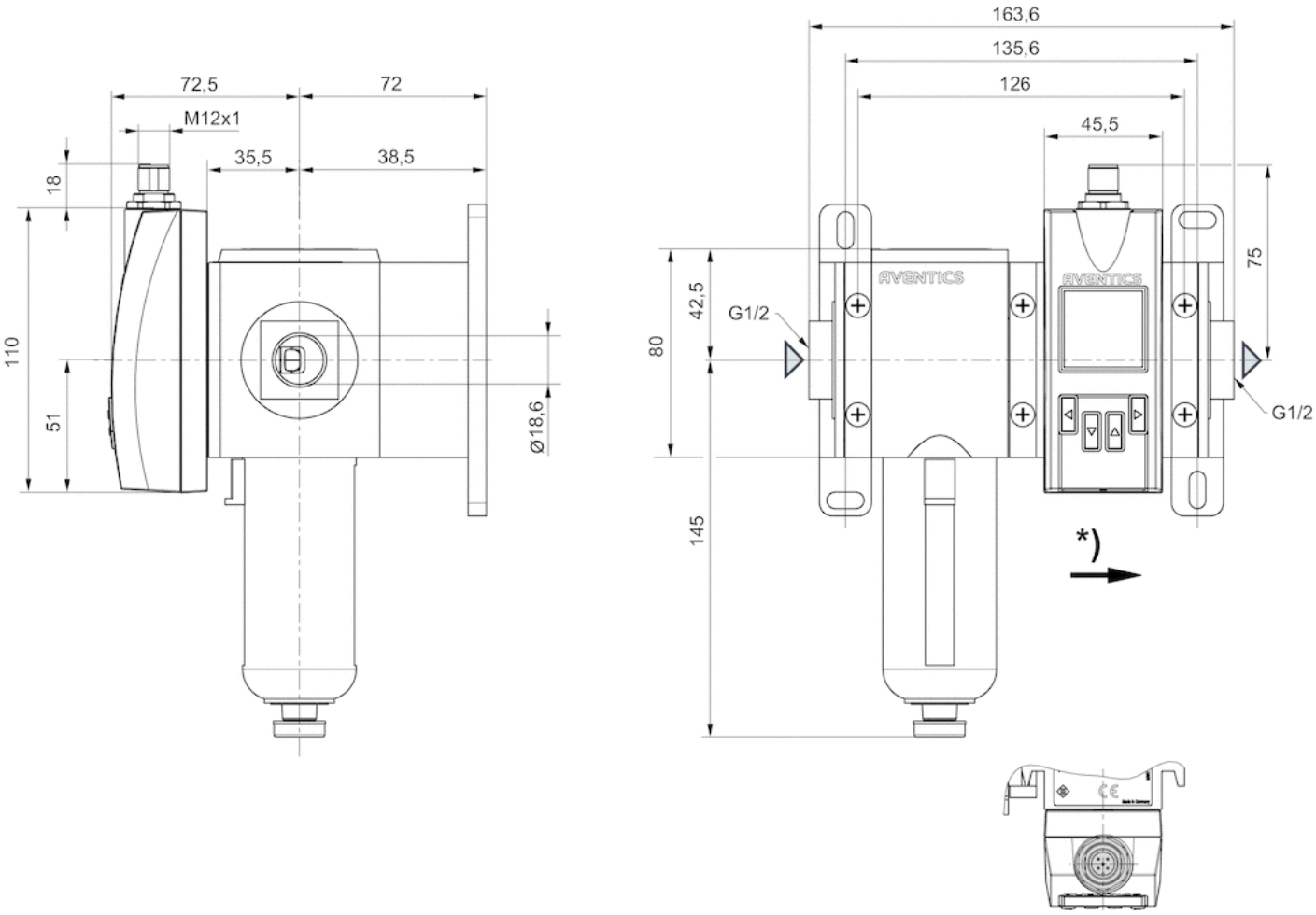

* Flow direction

Pin assignments

Pin assignments, M12x1, 5-pin

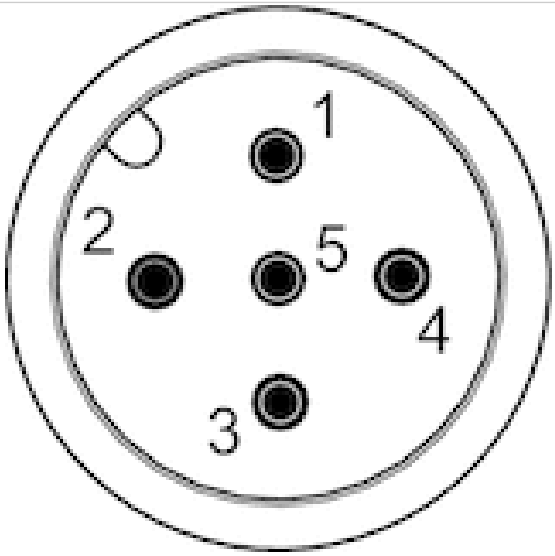

Pin	1	2	3
Allocation	L+	QA (output 4 ... 20 mA)	m = mass

4	5
C/Q1 (IO-Link/switch output)	Analog output 4 ... 20 mA

Flow sensor, IO-Link, Series AF2

- 2 analog outputs, 2 switch outputs, 1 frequency output, 1 pulse output, IO-Link, With mounting
- Flow measuring principle: calorimetric
- Qn min. 22 l/min
- Qn max. 6490 l/min
- Electrical connection Plug, M12x1, 5-pin

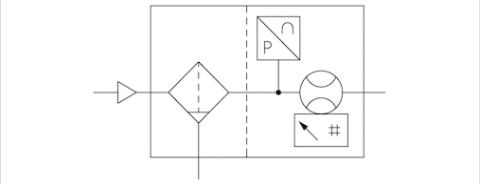

Certificates	CE declaration of conformity, RoHS
Working pressure min./max.	0 ... 16 bar
Ambient temperature min./max.	-20 ... 60 °C
Medium temperature min./max.	-20 ... 60 °C
Medium	Compressed air, Argon, Nitrogen, Helium, Carbon dioxide
filter porosity	5 µm
Display	OLED
Flow display unit	l/sec, l/min, m³/min, m³/h, ft³/s, m³/min
Pressure display unit	bar, psi
Temperature display unit	°C, °F
DC operating voltage min.	17 V DC
DC operating voltage max.	30 V DC
Max. power consumption *)	175 mA
Response time	10 ms
Protection class	IP65, IP67 according to IEC 60529
Short circuit resistance	short circuit resistant
Shock resistance max.	30 g, 11 ms
Vibration resistance	1 g (10 - 2000 Hz) IEC 60068 - 2-6
Reproducibility	± 1.5% of the measured value
Weight	2,82 kg
*)	Current consumption without load The delivered product may vary from that in the illustration.

Technical data

Part No.	for series	Compressed air connection	Nominal flow Qn	Nominal flow Qn	Nominal flow Qn
			Min., standard	Max., standard	Min., extended
R412026836	AS5	G 1	22 l/min	4326 l/min	4326 l/min

Part No.	Nominal flow Qn
	Max., extended
R412026836	6490 l/min

Standard measurement range for flow measurement: compressed air 0.5 ... 100 m/s, extended measurement range: compressed air >100 ... 150 m/s, in accordance with ISO 8778, Flow display range: 0 ... 12980 l/min

Technical information

The pressure dew point must be at least 15 °C under ambient and medium temperature and may not exceed 3 °C .
The protection class is only ensured when the plug is mounted properly. For detailed information, see operating instructions.
The device is designed to be installed in AS series air preparation units or to be fitted as a stand-alone device using a W05 block assembly kit.
Liquid oil or water must be separated via prefiltering. If it is not separated sufficiently, drifting may result.
Precision- Standard measurement range: ±3% of measured value, + 0.3% of final value- Extended measurement range: ±8% of measured value, + 1% of final value
The IO-Link device description (IODD) for the AF2 flow rate sensor is available for download in the Media Center.

Technical information

Material	
Housing	Polyamide, Polycarbonate
Seals	Fluorocaoutchouc

Dimensions

Dimensions in mm

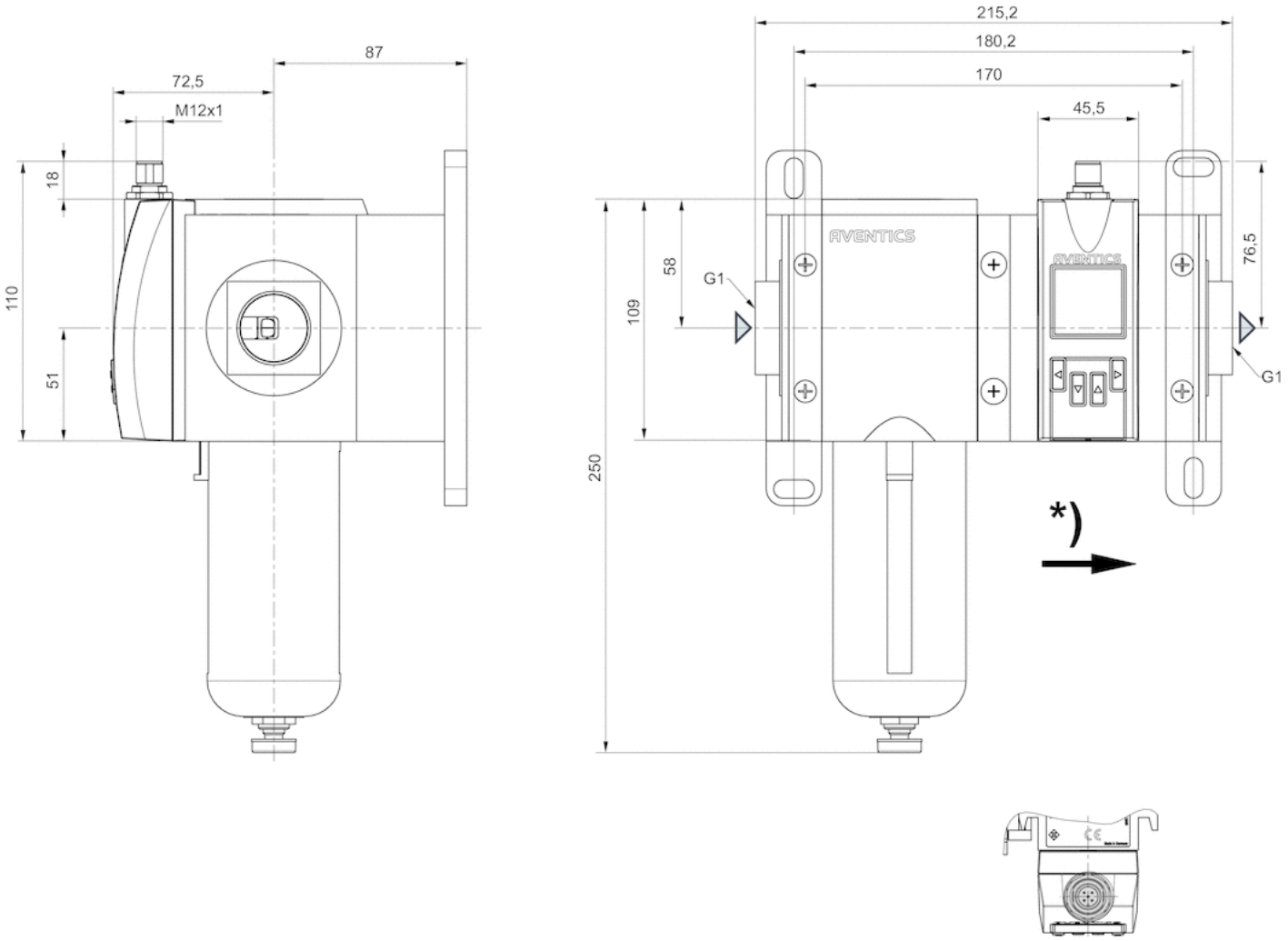

* Flow direction

Pin assignments

Pin assignments, M12x1, 5-pin

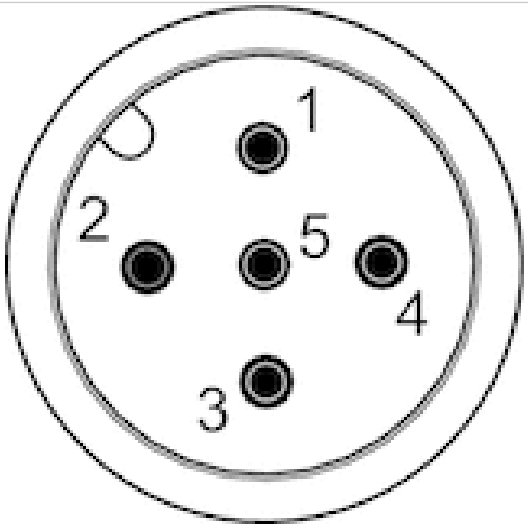

Pin	1	2	3
Allocation	L+	QA (output 4 ... 20 mA)	m = mass

4	5
C/Q1 (IO-Link/switch output)	Analog output 4 ... 20 mA

Flow sensor, Ethernet, Series AF2

- Ethernet, With mounting
- Flow measuring principle: calorimetric
- Qn min. 5 l/min
- Qn max. 1590 l/min
- Electrical connection Plug, M12x1, 8-pin

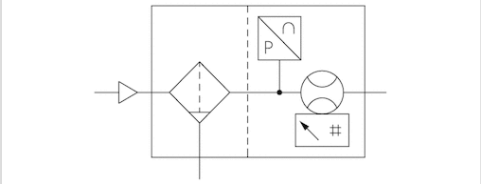

Certificates	CE declaration of conformity, RoHS
Working pressure min./max.	0 ... 16 bar
Ambient temperature min./max.	-20 ... 60 °C
Medium temperature min./max.	-20 ... 60 °C
Medium	Compressed air, Argon, Nitrogen, Helium, Carbon dioxide
filter porosity	5 µm
Display	OLED
Flow display unit	l/sec, l/min, m³/min, m³/h, ft³/s, m³/min
Pressure display unit	bar, psi
Temperature display unit	°C, °F
DC operating voltage min.	36 V DC
DC operating voltage max.	57 V DC
Power consumption max.	5 W
Response time	10 ms
Protection class	IP65, IP67 according to IEC 60529
Shock resistance max.	30 g, 11 ms
Vibration resistance	1 g (10 - 2000 Hz) IEC 60068 - 2-6
Reproducibility	± 1.5% of the measured value
Weight	1,23 kg
*)	The delivered product may vary from that in the illustration.

Technical data

Part No.	for series	Compressed air connection	Nominal flow Qn	Nominal flow Qn	Nominal flow Qn
			Min., standard	Max., standard	Min., extended
R412026837	AS2	G 3/8	5 l/min	1060 l/min	1060 l/min

Part No.	Nominal flow Qn
	Max., extended
R412026837	1590 l/min

Standard measurement range for flow measurement: compressed air 0.5 ... 100 m/s, extended measurement range: compressed air >100 ... 150 m/s, in accordance with ISO 8778, Flow display range: 0 ... 3180 l/min

Technical information

The pressure dew point must be at least 15 °C under ambient and medium temperature and may not exceed 3 °C .
The protection class is only ensured when the plug is mounted properly. For detailed information, see operating instructions.
The device is designed to be installed in AS series air preparation units or to be fitted as a stand-alone device using a W05 block assembly kit.
Liquid oil or water must be separated via prefiltering. If it is not separated sufficiently, drifting may result.
Precision- Standard measurement range: ±3% of measured value, + 0.3% of final value- Extended measurement range: ±8% of measured value, + 1% of final value

Technical information

Material	
Housing	Polyamide, Polycarbonate
Seals	Fluorocaoutchouc

Dimensions

Dimensions in mm

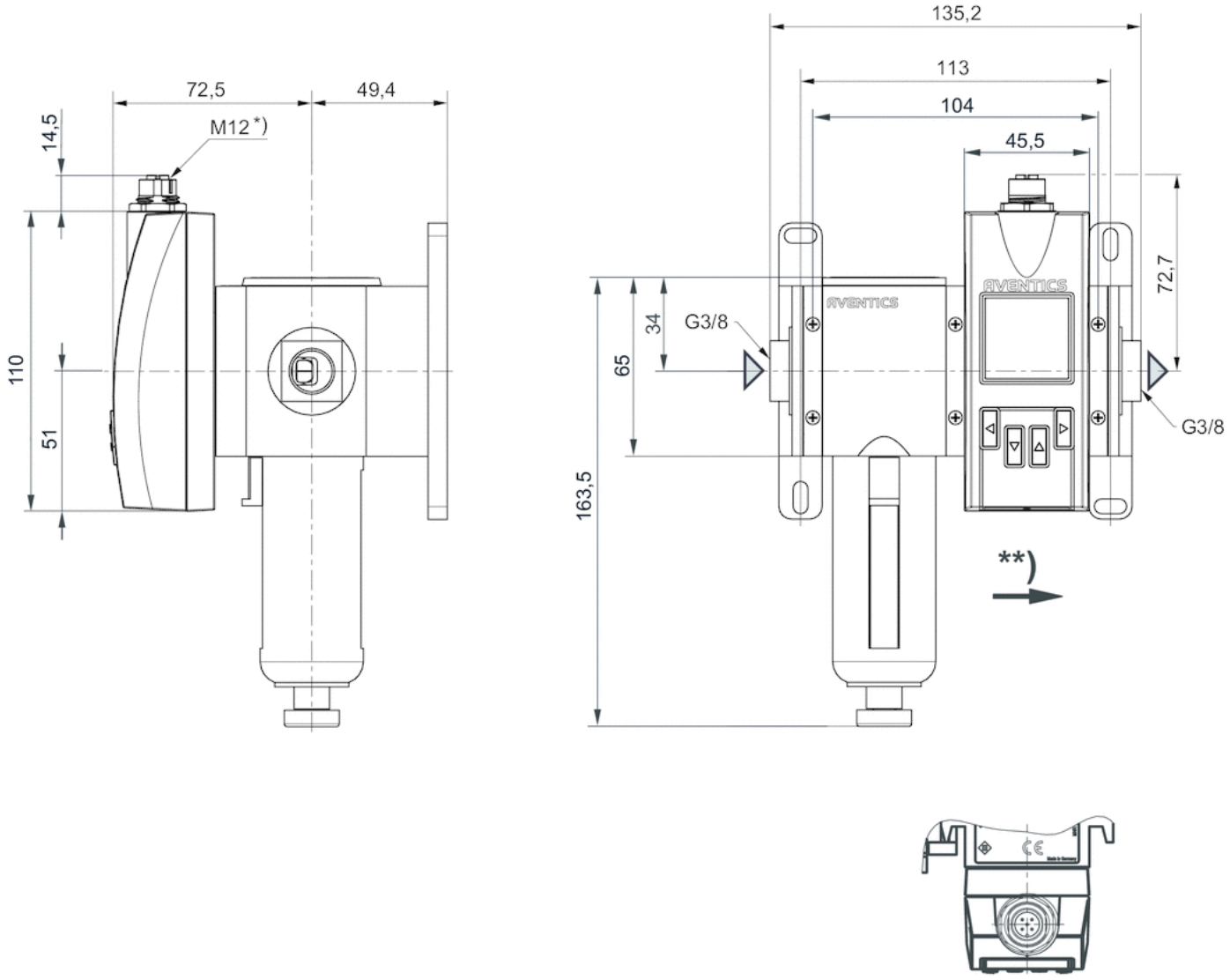

* Internal thread
** Flow direction

Pin assignments

Pin assignments, M12, X-coded

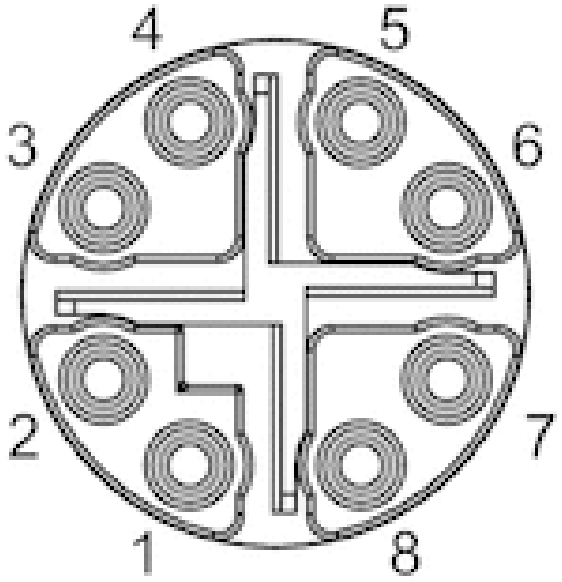

Pin	1	2	3	4	7	8	5
Color	WH / OG	OG	WH / GN	GN	WH / BU	BU	WH / BN
Function	TX(+) + POE	TX(-) + POE	RX(+) - POE	RX(-) - POE	POE+	POE+	POE-

6
BN
POE-

Flow sensor, Ethernet, Series AF2

- Ethernet, With mounting
- Flow measuring principle: calorimetric
- Qn min. 8 l/min
- Qn max. 2445 l/min
- Electrical connection Plug, M12x1, 8-pin

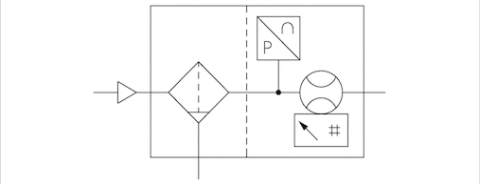

Certificates	CE declaration of conformity, RoHS
Working pressure min./max.	0 ... 16 bar
Ambient temperature min./max.	-20 ... 60 °C
Medium temperature min./max.	-20 ... 60 °C
Medium	Compressed air, Argon, Nitrogen, Helium, Carbon dioxide
filter porosity	5 µm
Display	OLED
Flow display unit	l/sec, l/min, m³/min, m³/h, ft³/s, m³/min
Pressure display unit	bar, psi
Temperature display unit	°C, °F
DC operating voltage min.	36 V DC
DC operating voltage max.	57 V DC
Power consumption max.	5 W
Response time	10 ms
Protection class	IP65, IP67 according to IEC 60529
Shock resistance max.	30 g, 11 ms
Vibration resistance	1 g (10 - 2000 Hz) IEC 60068 - 2-6
Reproducibility	± 1.5% of the measured value
Weight	1,97 kg

Technical data

Part No.	for series	Compressed air connection	Nominal flow Qn	Nominal flow Qn	Nominal flow Qn
			Min., standard	Max., standard	Min., extended
R412026838	AS3	G 1/2	8 l/min	1630 l/min	1630 l/min

Part No.	Nominal flow Qn
	Max., extended
R412026838	2445 l/min

Standard measurement range for flow measurement: compressed air 0.5 ... 100 m/s, extended measurement range: compressed air >100 ... 150 m/s, in accordance with ISO 8778, Flow display range: 0 ... 4890 l/min

Technical information

The pressure dew point must be at least 15 °C under ambient and medium temperature and may not exceed 3 °C .
The protection class is only ensured when the plug is mounted properly. For detailed information, see operating instructions.
The device is designed to be installed in AS series air preparation units or to be fitted as a stand-alone device using a W05 block assembly kit.
Liquid oil or water must be separated via prefiltering. If it is not separated sufficiently, drifting may result.
Precision- Standard measurement range: ±3% of measured value, + 0.3% of final value- Extended measurement range: ±8% of measured value, + 1% of final value

Technical information

Material	
Housing	Polyamide, Polycarbonate
Seals	Fluorocaoutchouc

Dimensions

Dimensions in mm

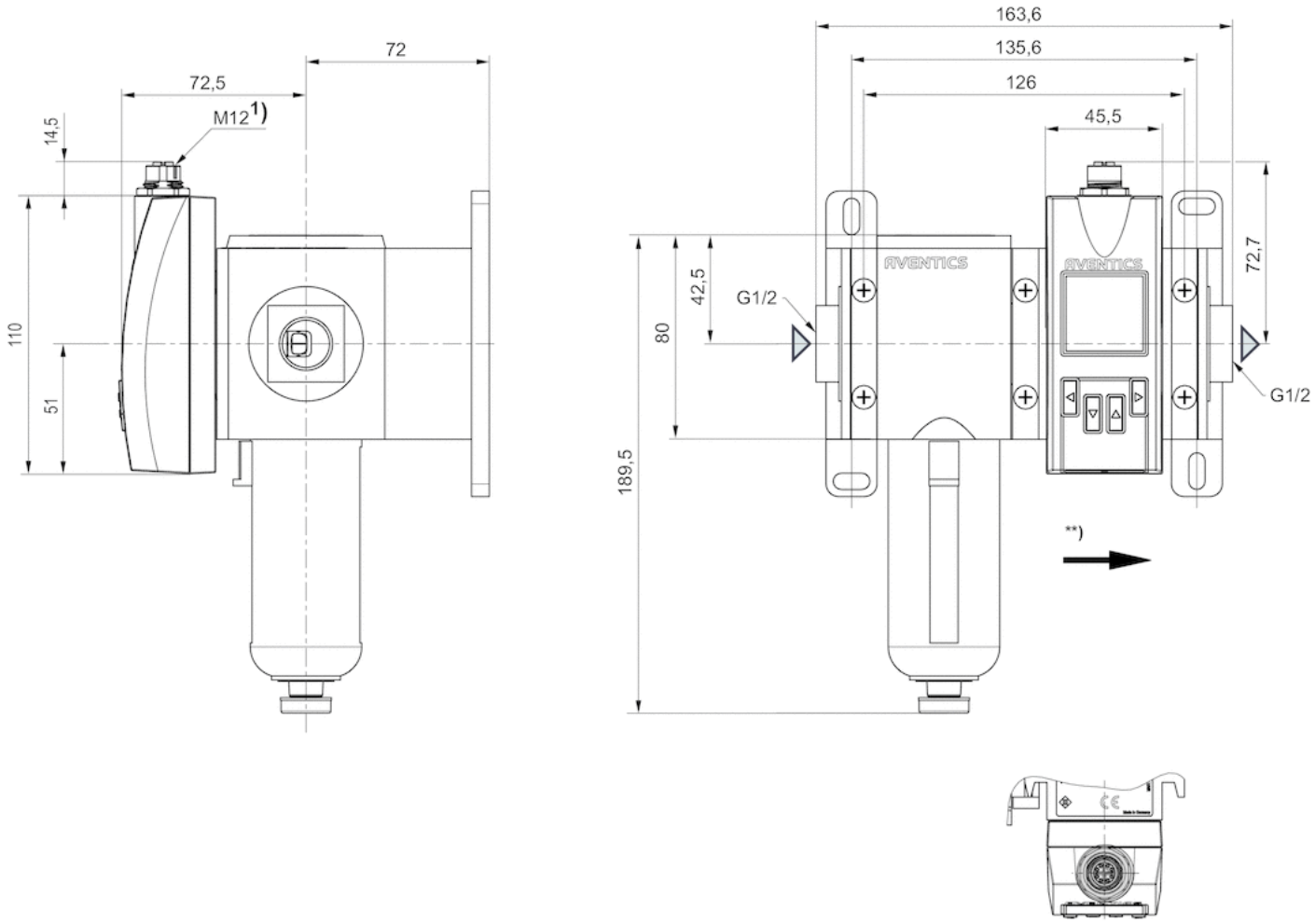

* Internal thread
** Flow direction

Pin assignments

Pin assignments, M12, X-coded

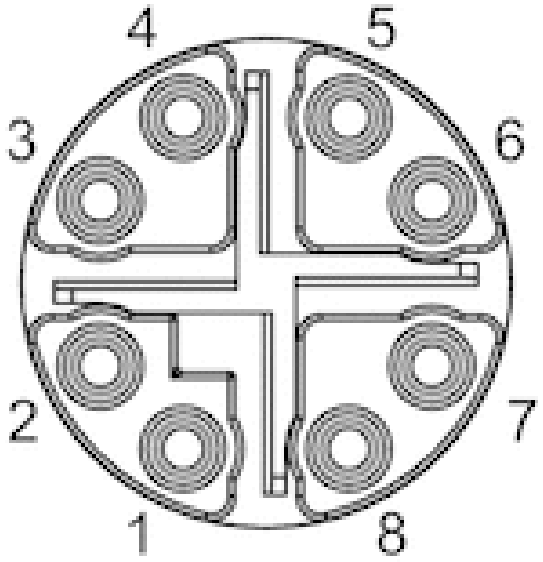

Pin	1	2	3	4	7	8	5
Color	WH / OG	OG	WH / GN	GN	WH / BU	BU	WH / BN
Function	TX(+) + POE	TX(-) + POE	RX(+) - POE	RX(-) - POE	POE+	POE+	POE-

6
BN
POE-

Flow sensor, Ethernet, Series AF2

- Ethernet, With mounting
- Flow measuring principle: calorimetric
- Qn min. 22 l/min
- Qn max. 6490 l/min
- Electrical connection Plug, M12x1, 8-pin

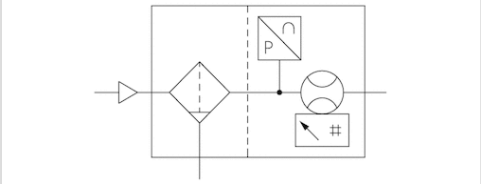

Certificates	CE declaration of conformity, RoHS
Working pressure min./max.	0 ... 16 bar
Ambient temperature min./max.	-20 ... 60 °C
Medium temperature min./max.	-20 ... 60 °C
Medium	Compressed air, Argon, Nitrogen, Helium, Carbon dioxide
filter porosity	5 µm
Display	OLED
Flow display unit	l/sec, l/min, m³/min, m³/h, ft³/s, m³/min
Pressure display unit	bar, psi
Temperature display unit	°C, °F
DC operating voltage min.	36 V DC
DC operating voltage max.	57 V DC
Power consumption max.	5 W
Response time	10 ms
Protection class	IP65, IP67 according to IEC 60529
Shock resistance max.	30 g, 11 ms
Vibration resistance	1 g (10 - 2000 Hz) IEC 60068 - 2-6
Reproducibility	± 1.5% of the measured value
Weight	2,82 kg
*)	The delivered product may vary from that in the illustration.

Technical data

Part No.	for series	Compressed air connection	Nominal flow Qn	Nominal flow Qn	Nominal flow Qn
			Min., standard	Max., standard	Min., extended
R412026839	AS5	G 1	22 l/min	4326 l/min	4326 l/min

Part No.	Nominal flow Qn
	Max., extended
R412026839	6490 l/min

Standard measurement range for flow measurement: compressed air 0.5 ... 100 m/s, extended measurement range: compressed air >100 ... 150 m/s, in accordance with ISO 8778, Flow display range: 0 ... 12980 l/min

Technical information

The pressure dew point must be at least 15 °C under ambient and medium temperature and may not exceed 3 °C .
The protection class is only ensured when the plug is mounted properly. For detailed information, see operating instructions.
The device is designed to be installed in AS series air preparation units or to be fitted as a stand-alone device using a W05 block assembly kit.
Liquid oil or water must be separated via prefiltering. If it is not separated sufficiently, drifting may result.
Precision- Standard measurement range: ±3% of measured value, + 0.3% of final value- Extended measurement range: ±8% of measured value, + 1% of final value

Technical information

Material	
Housing	Polyamide, Polycarbonate
Seals	Fluorocaoutchouc

Dimensions

Dimensions in mm

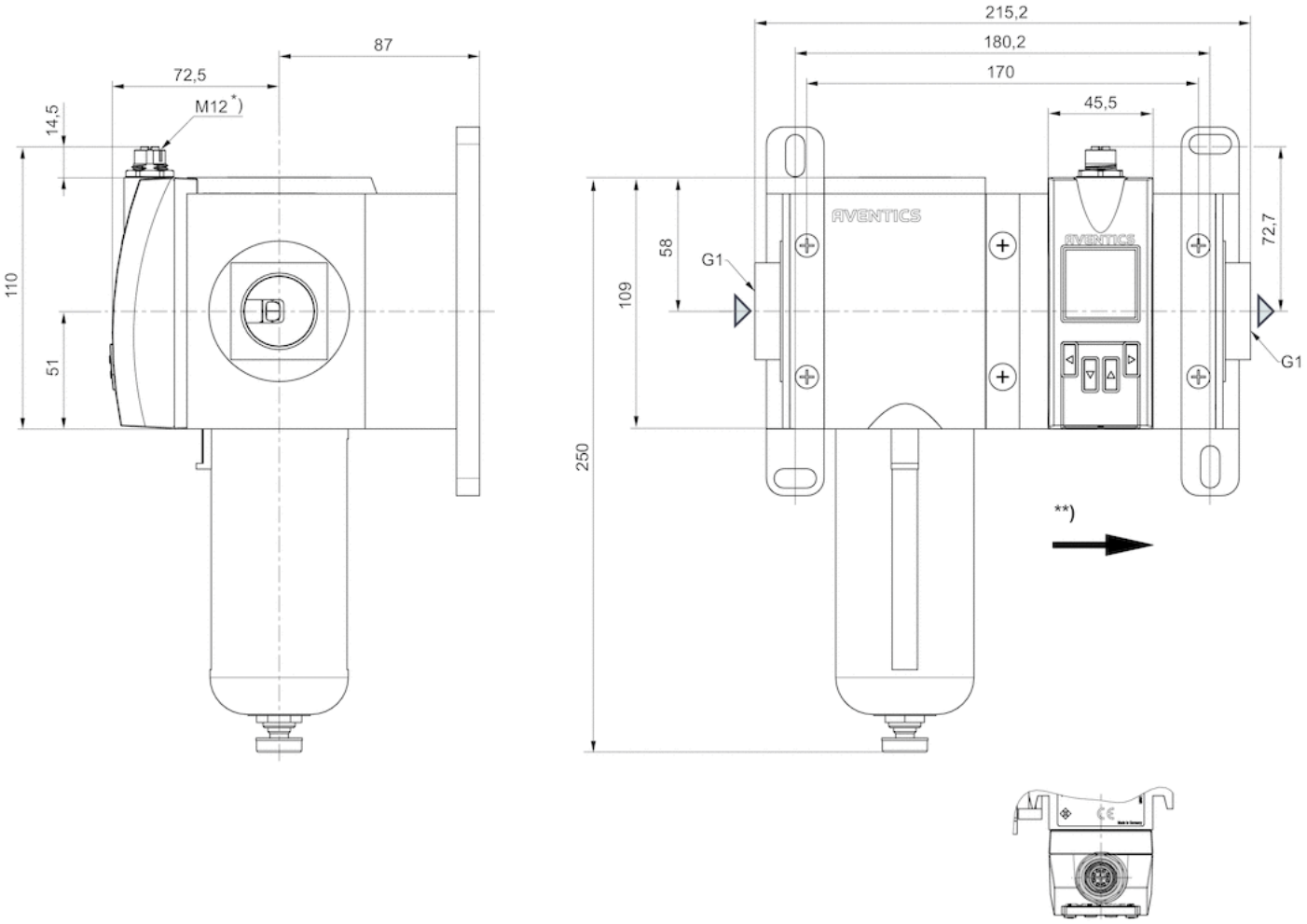

* Internal thread
** Flow direction

Pin assignments

Pin assignments, M12, X-coded

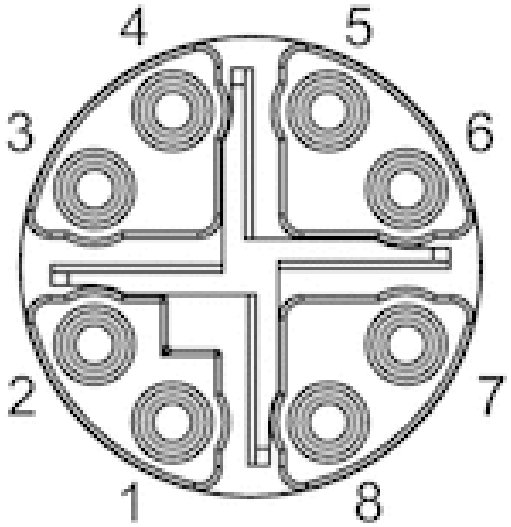

Pin	1	2	3	4	7	8	5
Color	WH / OG	OG	WH / GN	GN	WH / BU	BU	WH / BN
Function	TX(+) + POE	TX(-) + POE	RX(+) - POE	RX(-) - POE	POE+	POE+	POE-

6
BN
POE-

Flow sensor, IO-Link, Series AF2

- 2 analog outputs, 2 switch outputs, 1 frequency output, 1 pulse output, IO-Link, Without mounting
- Flow measuring principle: calorimetric
- Qn min. 5 l/min
- Qn max. 1590 l/min
- Electrical connection Plug, M12x1, 5-pin

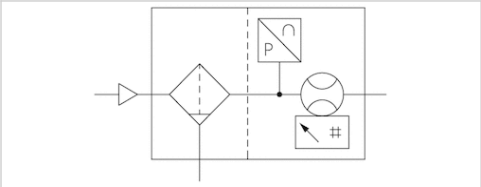

Certificates	CE declaration of conformity, RoHS
Working pressure min./max.	0 ... 16 bar
Ambient temperature min./max.	-20 ... 60 °C
Medium temperature min./max.	-20 ... 60 °C
Medium	Compressed air, Argon, Nitrogen, Helium, Carbon dioxide
filter porosity	5 µm
Display	OLED
Flow display unit	l/sec, l/min, m³/min, m³/h, ft³/s, m³/min
Pressure display unit	bar, psi
Temperature display unit	°C, °F
DC operating voltage min.	17 V DC
DC operating voltage max.	30 V DC
Max. power consumption *)	175 mA
Response time	10 ms
Protection class	IP65, IP67 according to IEC 60529
Short circuit resistance	short circuit resistant
Shock resistance max.	30 g, 11 ms
Vibration resistance	1 g (10 - 2000 Hz) IEC 60068 - 2-6
Reproducibility	± 1.5% of the measured value
Weight	0,85 kg
*)	Current consumption without load The delivered product may vary from that in the illustration.

Technical data

Part No.	for series	Compressed air connection	Nominal flow Qn	Nominal flow Qn	Nominal flow Qn
			Min., standard	Max., standard	Min., extended
R412027176	AS2	G 3/8	5 l/min	1060 l/min	1060 l/min

Part No.	Nominal flow Qn
	Max., extended
R412027176	1590 l/min

Standard measurement range for flow measurement: compressed air 0.5 ... 100 m/s, extended measurement range: compressed air >100 ... 150 m/s, in accordance with ISO 8778, Flow display range: 0 ... 3180 l/min

Technical information

The pressure dew point must be at least 15 °C under ambient and medium temperature and may not exceed 3 °C .
The protection class is only ensured when the plug is mounted properly. For detailed information, see operating instructions.
The device is designed to be installed in AS series air preparation units or to be fitted as a stand-alone device using a W05 block assembly kit.
Liquid oil or water must be separated via prefiltering. If it is not separated sufficiently, drifting may result.
Precision- Standard measurement range: ±3% of measured value, + 0.3% of final value- Extended measurement range: ±8% of measured value, + 1% of final value
The IO-Link device description (IODD) for the AF2 flow rate sensor is available for download in the Media Center.

Technical information

Material	
Housing	Polyamide, Polycarbonate
Seals	Fluorocaoutchouc

Dimensions

Dimensions in mm

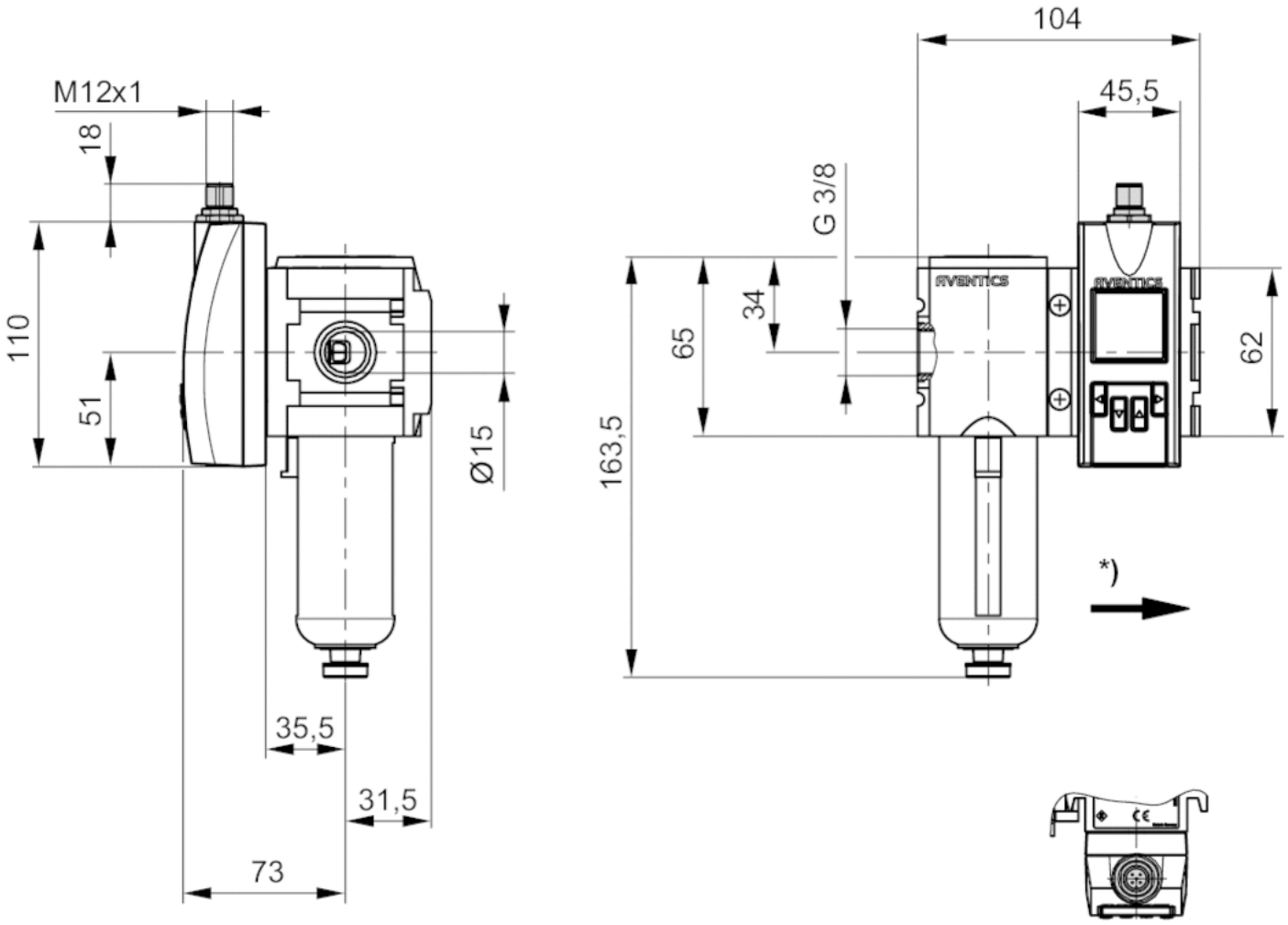

* Flow direction

Pin assignments

Pin assignments, M12x1, 5-pin

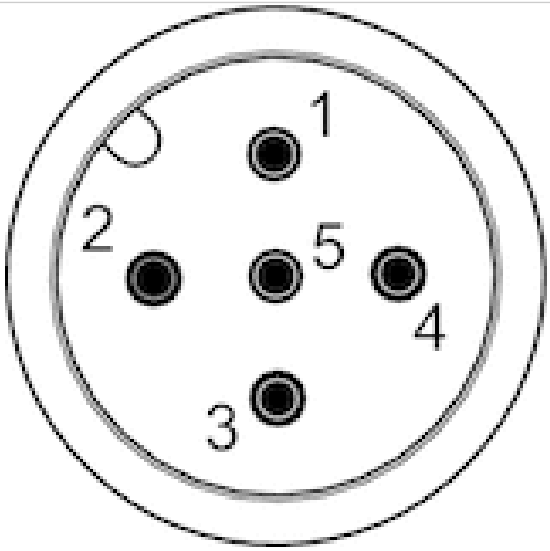

Pin	1	2	3
Allocation	L+	QA (output 4 ... 20 mA)	m = mass

4	5
C/Q1 (IO-Link/switch output)	Analog output 4 ... 20 mA

Flow sensor, IO-Link, Series AF2

- 2 analog outputs, 2 switch outputs, 1 frequency output, 1 pulse output, IO-Link, Without mounting
- Flow measuring principle: calorimetric
- Qn min. 8 l/min
- Qn max. 2445 l/min
- Electrical connection Plug, M12x1, 5-pin

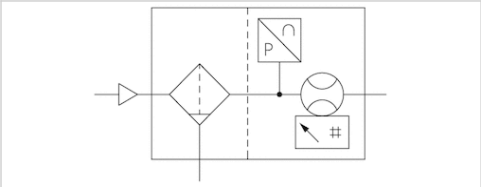

Certificates	CE declaration of conformity, RoHS
Working pressure min./max.	0 ... 16 bar
Ambient temperature min./max.	-20 ... 60 °C
Medium temperature min./max.	-20 ... 60 °C
Medium	Compressed air, Argon, Nitrogen, Helium, Carbon dioxide
filter porosity	5 µm
Display	OLED
Flow display unit	l/sec, l/min, m³/min, m³/h, ft³/s, m³/min
Pressure display unit	bar, psi
Temperature display unit	°C, °F
DC operating voltage min.	17 V DC
DC operating voltage max.	30 V DC
Max. power consumption *)	175 mA
Response time	10 ms
Protection class	IP65, IP67 according to IEC 60529
Short circuit resistance	short circuit resistant
Shock resistance max.	30 g, 11 ms
Vibration resistance	1 g (10 - 2000 Hz) IEC 60068 - 2-6
Reproducibility	± 1.5% of the measured value
Weight	1,25 kg
*)	Current consumption without load

Technical data

Part No.	for series	Compressed air connection	Nominal flow Qn	Nominal flow Qn	Nominal flow Qn
			Min., standard	Max., standard	Min., extended
R412027177	AS3	G 1/2	8 l/min	1630 l/min	1630 l/min

Part No.	Nominal flow Qn
	Max., extended
R412027177	2445 l/min

Standard measurement range for flow measurement: compressed air 0.5 ... 100 m/s, extended measurement range: compressed air >100 ... 150 m/s, in accordance with ISO 8778, Flow display range: 0 ... 4890 l/min

Technical information

The pressure dew point must be at least 15 °C under ambient and medium temperature and may not exceed 3 °C .
The protection class is only ensured when the plug is mounted properly. For detailed information, see operating instructions.
The device is designed to be installed in AS series air preparation units or to be fitted as a stand-alone device using a W05 block assembly kit.
Liquid oil or water must be separated via prefiltering. If it is not separated sufficiently, drifting may result.
Precision- Standard measurement range: ±3% of measured value, + 0.3% of final value- Extended measurement range: ±8% of measured value, + 1% of final value
The IO-Link device description (IODD) for the AF2 flow rate sensor is available for download in the Media Center.

Technical information

Material	
Housing	Polyamide, Polycarbonate
Seals	Fluorocaoutchouc

Dimensions

Dimensions in mm

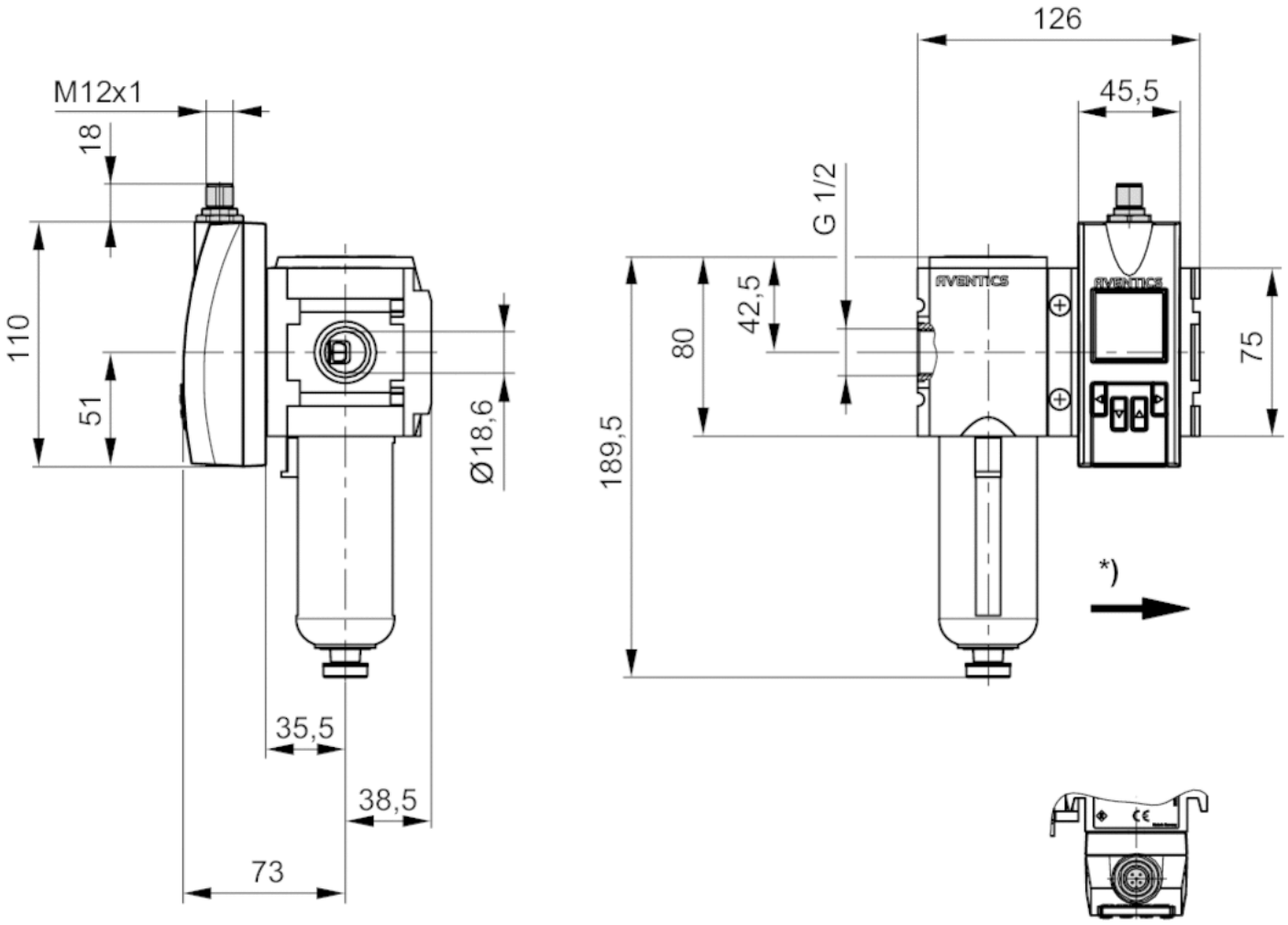

* Flow direction

Pin assignments

Pin assignments, M12x1, 5-pin

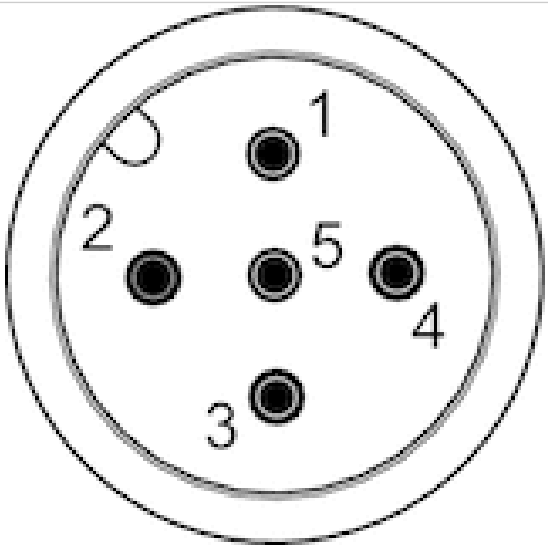

Pin	1	2	3
Allocation	L+	QA (output 4 ... 20 mA)	m = mass

4	5
C/Q1 (IO-Link/switch output)	Analog output 4 ... 20 mA

Flow sensor, IO-Link, Series AF2

- 2 analog outputs, 2 switch outputs, 1 frequency output, 1 pulse output, IO-Link, Without mounting
- Flow measuring principle: calorimetric
- Qn min. 22 l/min
- Qn max. 6490 l/min
- Electrical connection Plug, M12x1, 5-pin

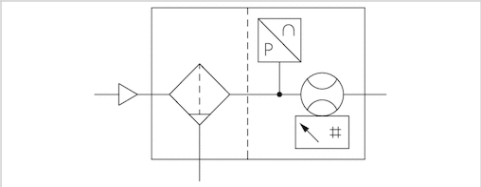

Certificates	CE declaration of conformity, RoHS
Working pressure min./max.	0 ... 16 bar
Ambient temperature min./max.	-20 ... 60 °C
Medium temperature min./max.	-20 ... 60 °C
Medium	Compressed air, Argon, Nitrogen, Helium, Carbon dioxide
filter porosity	5 µm
Display	OLED
Flow display unit	l/sec, l/min, m³/min, m³/h, ft³/s, m³/min
Pressure display unit	bar, psi
Temperature display unit	°C, °F
DC operating voltage min.	17 V DC
DC operating voltage max.	30 V DC
Max. power consumption *)	175 mA
Response time	10 ms
Protection class	IP65, IP67 according to IEC 60529
Short circuit resistance	short circuit resistant
Shock resistance max.	30 g, 11 ms
Vibration resistance	1 g (10 - 2000 Hz) IEC 60068 - 2-6
Reproducibility	± 1.5% of the measured value
Weight	2,3 kg
*)	Current consumption without load The delivered product may vary from that in the illustration.

Technical data

Part No.	for series	Compressed air connection	Nominal flow Qn	Nominal flow Qn	Nominal flow Qn
			Min., standard	Max., standard	Min., extended
R412027178	AS5	G 1	22 l/min	4326 l/min	4326 l/min

Part No.	Nominal flow Qn
	Max., extended
R412027178	6490 l/min

Standard measurement range for flow measurement: compressed air 0.5 ... 100 m/s, extended measurement range: compressed air >100 ... 150 m/s, in accordance with ISO 8778, Flow display range: 0 ... 12980 l/min

Technical information

The pressure dew point must be at least 15 °C under ambient and medium temperature and may not exceed 3 °C .
The protection class is only ensured when the plug is mounted properly. For detailed information, see operating instructions.
The device is designed to be installed in AS series air preparation units or to be fitted as a stand-alone device using a W05 block assembly kit.
Liquid oil or water must be separated via prefiltering. If it is not separated sufficiently, drifting may result.
Precision- Standard measurement range: ±3% of measured value, + 0.3% of final value- Extended measurement range: ±8% of measured value, + 1% of final value
The IO-Link device description (IODD) for the AF2 flow rate sensor is available for download in the Media Center.

Technical information

Material	
Housing	Polyamide, Polycarbonate
Seals	Fluorocaoutchouc

Dimensions

Dimensions in mm

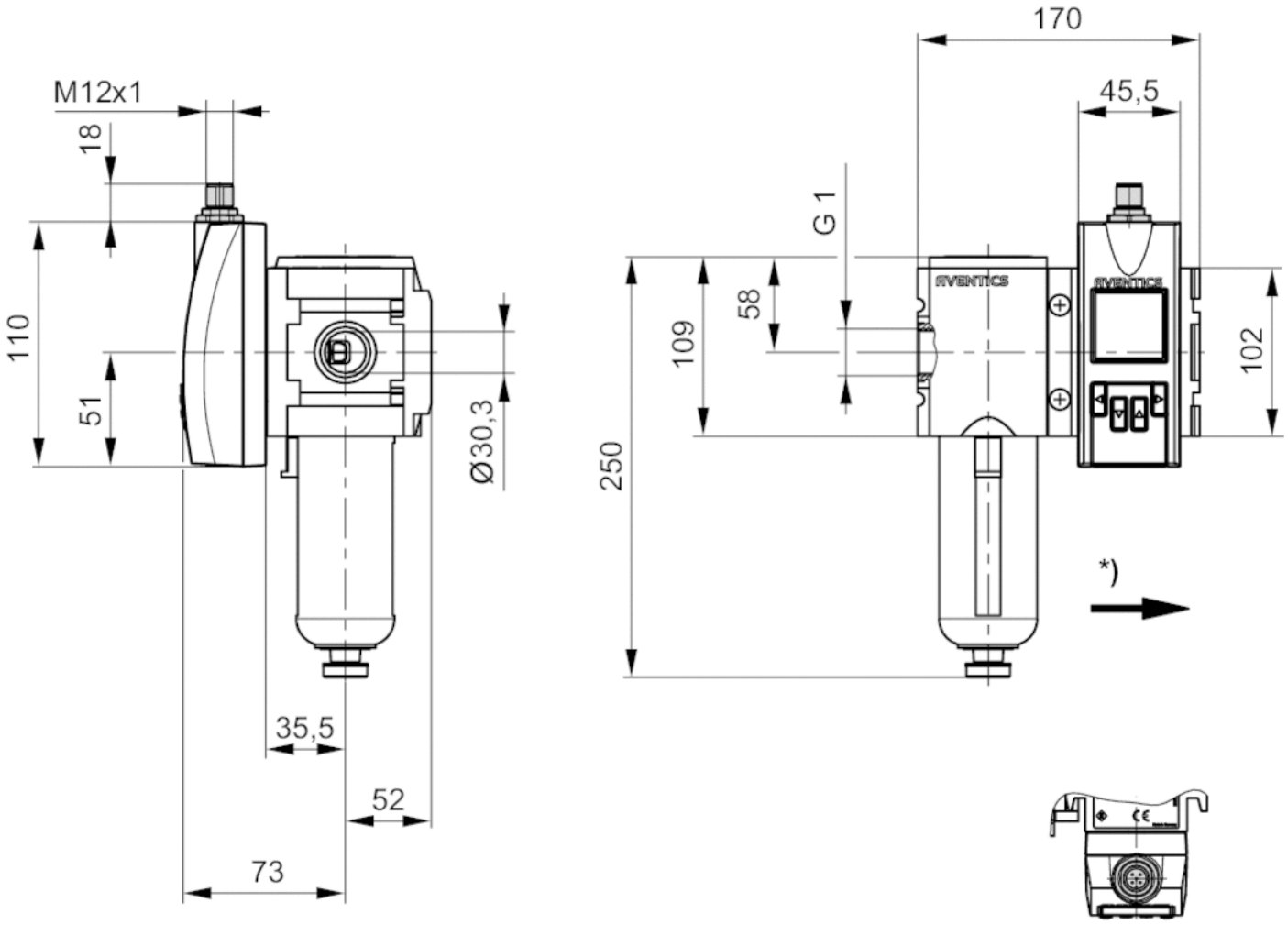

* Flow direction

Pin assignments

Pin assignments, M12x1, 5-pin

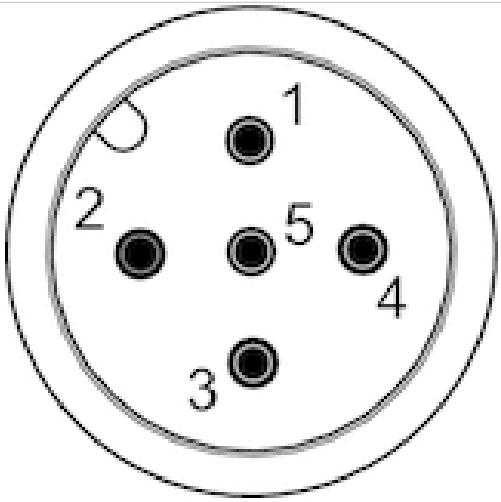

Pin	1	2	3
Allocation	L+	QA (output 4 ... 20 mA)	m = mass

4	5
C/Q1 (IO-Link/switch output)	Analog output 4 ... 20 mA

Flow sensor, Ethernet, Series AF2

- Ethernet, Without mounting
- Flow measuring principle: calorimetric
- Qn min. 5 l/min
- Qn max. 1590 l/min
- Electrical connection Plug, M12x1, 8-pin

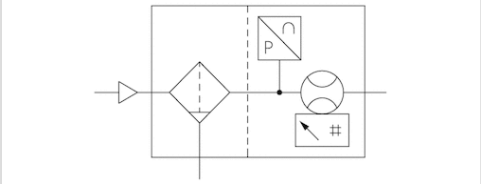

Certificates	CE declaration of conformity, RoHS
Working pressure min./max.	0 ... 16 bar
Ambient temperature min./max.	-20 ... 60 °C
Medium temperature min./max.	-20 ... 60 °C
Medium	Compressed air, Argon, Nitrogen, Helium, Carbon dioxide
filter porosity	5 µm
Display	OLED
Flow display unit	l/sec, l/min, m³/min, m³/h, ft³/s, m³/min
Pressure display unit	bar, psi
Temperature display unit	°C, °F
DC operating voltage min.	36 V DC
DC operating voltage max.	57 V DC
Power consumption max.	5 W
Response time	10 ms
Protection class	IP65, IP67 according to IEC 60529
Shock resistance max.	30 g, 11 ms
Vibration resistance	1 g (10 - 2000 Hz) IEC 60068 - 2-6
Reproducibility	± 1.5% of the measured value
Weight	0,85 kg
*)	The delivered product may vary from that in the illustration.

Technical data

Part No.	for series	Compressed air connection	Nominal flow Qn	Nominal flow Qn	Nominal flow Qn
			Min., standard	Max., standard	Min., extended
R412027179	AS2	G 3/8	5 l/min	1060 l/min	1060 l/min

Part No.	Nominal flow Qn
	Max., extended
R412027179	1590 l/min

Standard measurement range for flow measurement: compressed air 0.5 ... 100 m/s, extended measurement range: compressed air >100 ... 150 m/s, in accordance with ISO 8778, Flow display range: 0 ... 3180 l/min

Technical information

The pressure dew point must be at least 15 °C under ambient and medium temperature and may not exceed 3 °C .
The protection class is only ensured when the plug is mounted properly. For detailed information, see operating instructions.
The device is designed to be installed in AS series air preparation units or to be fitted as a stand-alone device using a W05 block assembly kit.
Liquid oil or water must be separated via prefiltering. If it is not separated sufficiently, drifting may result.
Precision- Standard measurement range: ±3% of measured value, + 0.3% of final value- Extended measurement range: ±8% of measured value, + 1% of final value

Technical information

Material	
Housing	Polyamide, Polycarbonate
Seals	Fluorocaoutchouc

Dimensions

Dimensions in mm

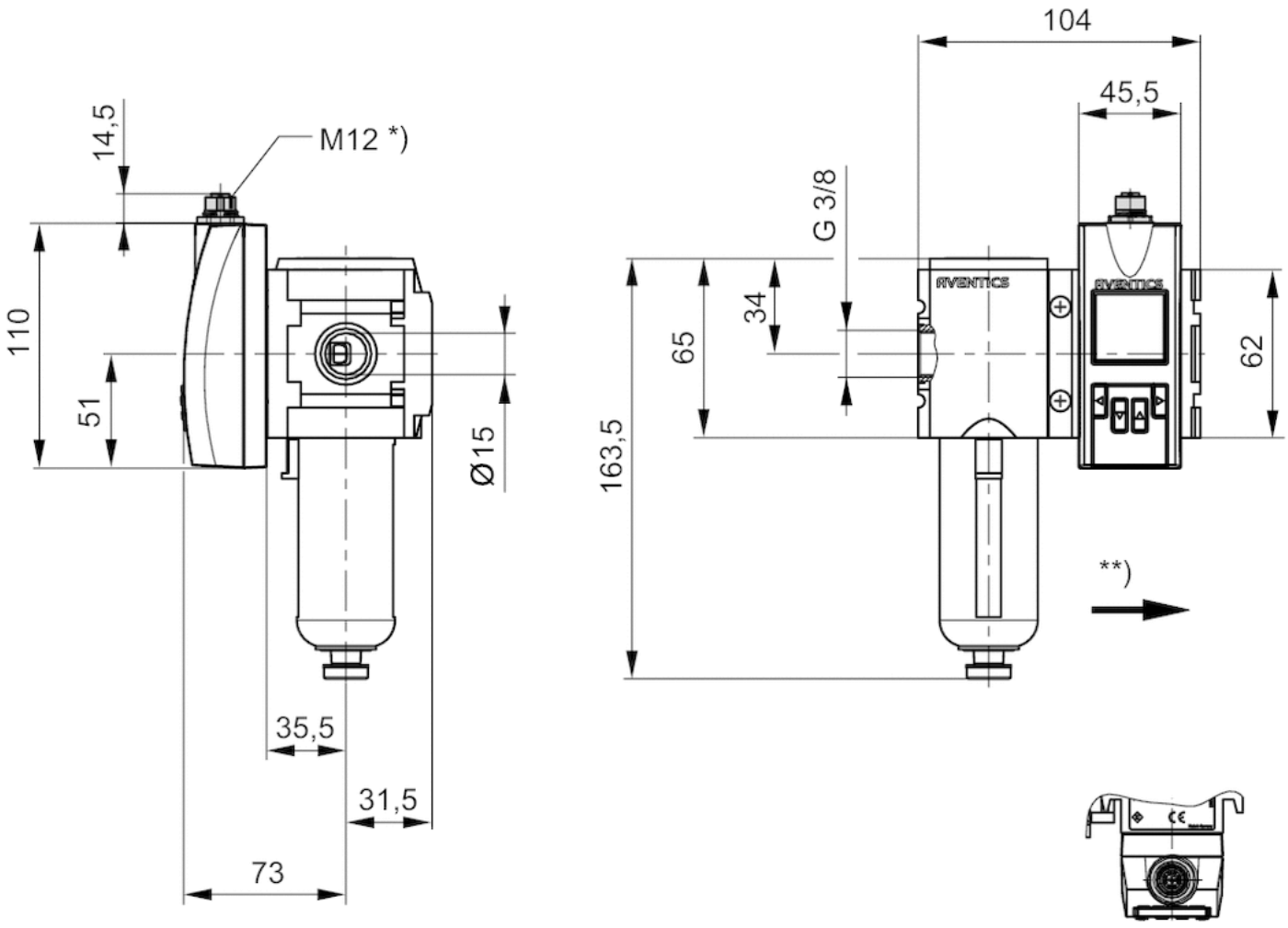

* Internal thread
** Flow direction

Pin assignments

Pin assignments, M12, X-coded

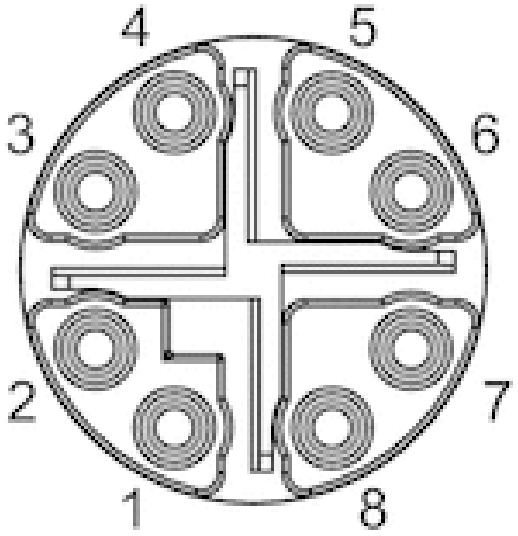

Pin	1	2	3	4	7	8	5
Color	WH / OG	OG	WH / GN	GN	WH / BU	BU	WH / BN
Function	TX(+) + POE	TX(-) + POE	RX(+) - POE	RX(-) - POE	POE+	POE+	POE-

6
BN
POE-

Flow sensor, Ethernet, Series AF2

- Ethernet, Without mounting
- Flow measuring principle: calorimetric
- Qn min. 8 l/min
- Qn max. 2445 l/min
- Electrical connection Plug, M12x1, 8-pin

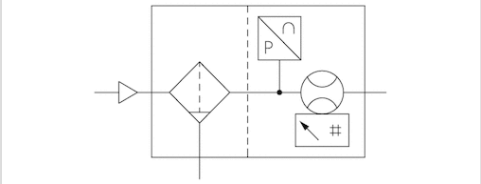

Certificates	CE declaration of conformity, RoHS
Working pressure min./max.	0 ... 16 bar
Ambient temperature min./max.	-20 ... 60 °C
Medium temperature min./max.	-20 ... 60 °C
Medium	Compressed air, Argon, Nitrogen, Helium, Carbon dioxide
filter porosity	5 µm
Display	OLED
Flow display unit	l/sec, l/min, m³/min, m³/h, ft³/s, m³/min
Pressure display unit	bar, psi
Temperature display unit	°C, °F
DC operating voltage min.	36 V DC
DC operating voltage max.	57 V DC
Power consumption max.	5 W
Response time	10 ms
Protection class	IP65, IP67 according to IEC 60529
Shock resistance max.	30 g, 11 ms
Vibration resistance	1 g (10 - 2000 Hz) IEC 60068 - 2-6
Reproducibility	± 1.5% of the measured value
Weight	1,25 kg

Technical data

Part No.	for series	Compressed air connection	Nominal flow Qn	Nominal flow Qn	Nominal flow Qn
			Min., standard	Max., standard	Min., extended
R412027180	AS3	G 1/2	8 l/min	1630 l/min	1630 l/min

Part No.	Nominal flow Qn
	Max., extended
R412027180	2445 l/min

Standard measurement range for flow measurement: compressed air 0.5 ... 100 m/s, extended measurement range: compressed air >100 ... 150 m/s, in accordance with ISO 8778, Flow display range: 0 ... 4890 l/min

Technical information

The pressure dew point must be at least 15 °C under ambient and medium temperature and may not exceed 3 °C .
The protection class is only ensured when the plug is mounted properly. For detailed information, see operating instructions.
The device is designed to be installed in AS series air preparation units or to be fitted as a stand-alone device using a W05 block assembly kit.
Liquid oil or water must be separated via prefiltering. If it is not separated sufficiently, drifting may result.
Precision- Standard measurement range: ±3% of measured value, + 0.3% of final value- Extended measurement range: ±8% of measured value, + 1% of final value

Technical information

Material	
Housing	Polyamide, Polycarbonate
Seals	Fluorocaoutchouc

Dimensions

Dimensions in mm

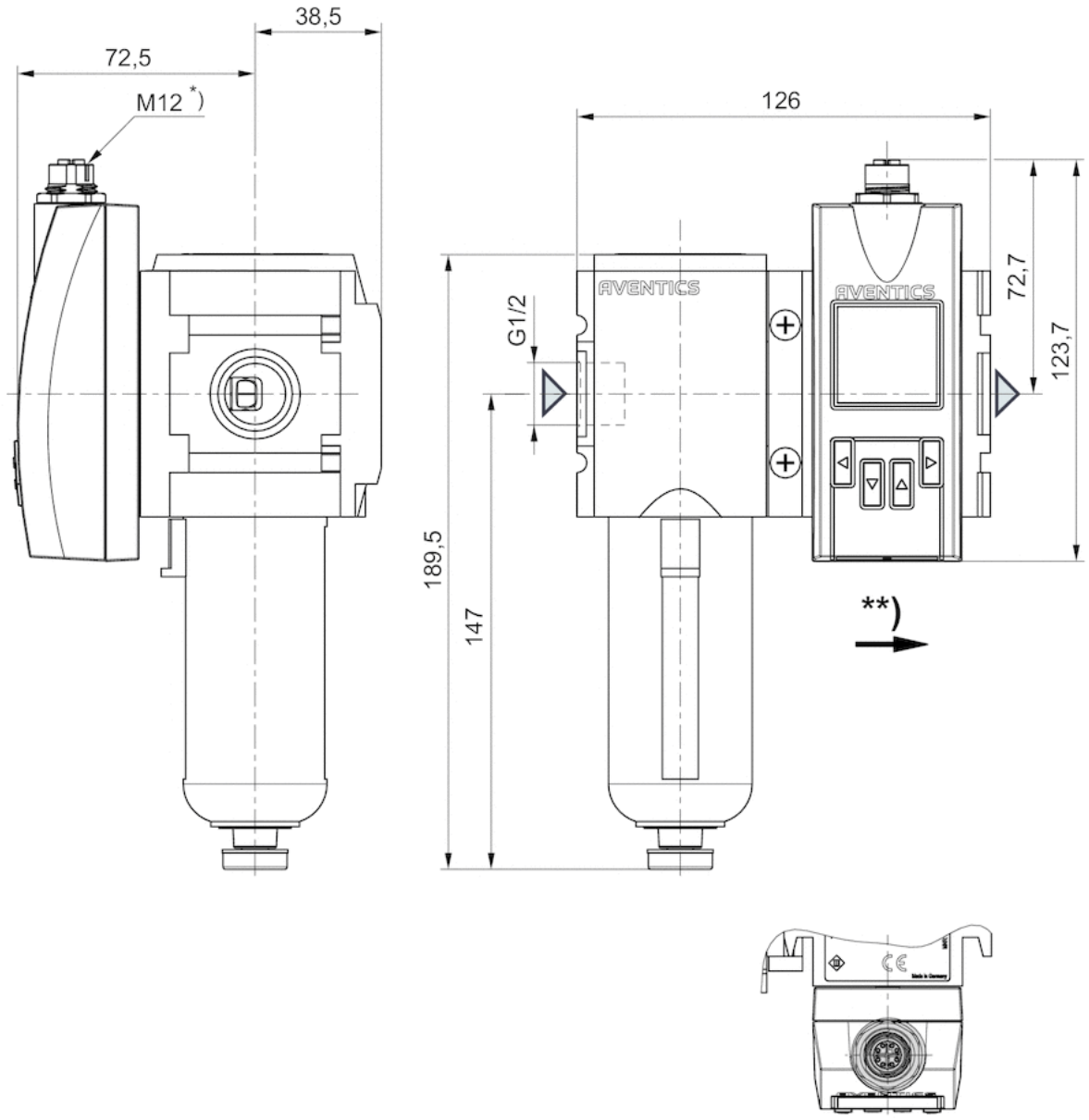

* Internal thread
** Flow direction

Pin assignments

Pin assignments, M12, X-coded

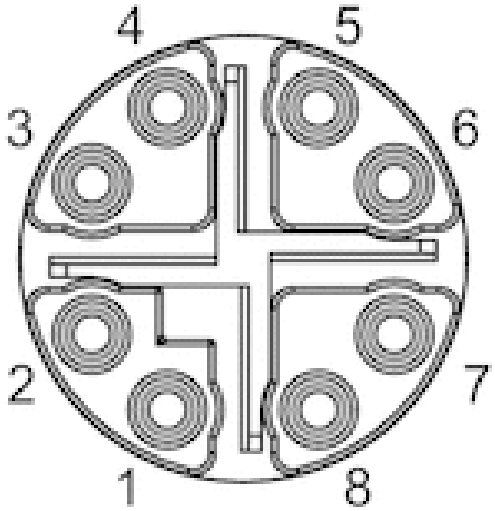

Pin	1	2	3	4	7	8	5
Color	WH / OG	OG	WH / GN	GN	WH / BU	BU	WH / BN
Function	TX(+) + POE	TX(-) + POE	RX(+) - POE	RX(-) - POE	POE+	POE+	POE-

6
BN
POE-

Flow sensor, Ethernet, Series AF2

- Ethernet, Without mounting
- Flow measuring principle: calorimetric
- Qn min. 22 l/min
- Qn max. 6490 l/min
- Electrical connection Plug, M12x1, 8-pin

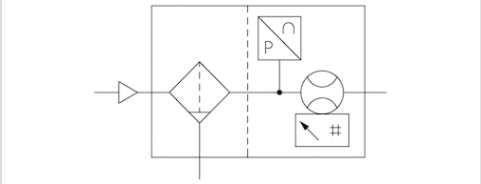

Certificates	CE declaration of conformity, RoHS
Working pressure min./max.	0 ... 16 bar
Ambient temperature min./max.	-20 ... 60 °C
Medium temperature min./max.	-20 ... 60 °C
Medium	Compressed air, Argon, Nitrogen, Helium, Carbon dioxide
filter porosity	5 µm
Display	OLED
Flow display unit	l/sec, l/min, m³/min, m³/h, ft³/s, m³/min
Pressure display unit	bar, psi
Temperature display unit	°C, °F
DC operating voltage min.	36 V DC
DC operating voltage max.	57 V DC
Power consumption max.	5 W
Response time	10 ms
Protection class	IP65, IP67 according to IEC 60529
Shock resistance max.	30 g, 11 ms
Vibration resistance	1 g (10 - 2000 Hz) IEC 60068 - 2-6
Reproducibility	± 1.5% of the measured value
Weight	2,3 kg
*)	The delivered product may vary from that in the illustration.

Technical data

Part No.	for series	Compressed air connection	Nominal flow Qn	Nominal flow Qn	Nominal flow Qn
			Min., standard	Max., standard	Min., extended
R412027181	AS5	G 1	22 l/min	4326 l/min	4326 l/min

Part No.	Nominal flow Qn
	Max., extended
R412027181	6490 l/min

Standard measurement range for flow measurement: compressed air 0.5 ... 100 m/s, extended measurement range: compressed air >100 ... 150 m/s, in accordance with ISO 8778, Flow display range: 0 ... 12980 l/min

Technical information

The pressure dew point must be at least 15 °C under ambient and medium temperature and may not exceed 3 °C .
The protection class is only ensured when the plug is mounted properly. For detailed information, see operating instructions.
The device is designed to be installed in AS series air preparation units or to be fitted as a stand-alone device using a W05 block assembly kit.
Liquid oil or water must be separated via prefiltering. If it is not separated sufficiently, drifting may result.
Precision- Standard measurement range: ±3% of measured value, + 0.3% of final value- Extended measurement range: ±8% of measured value, + 1% of final value

Technical information

Material	
Housing	Polyamide, Polycarbonate
Seals	Fluorocaoutchouc

Dimensions

Dimensions in mm

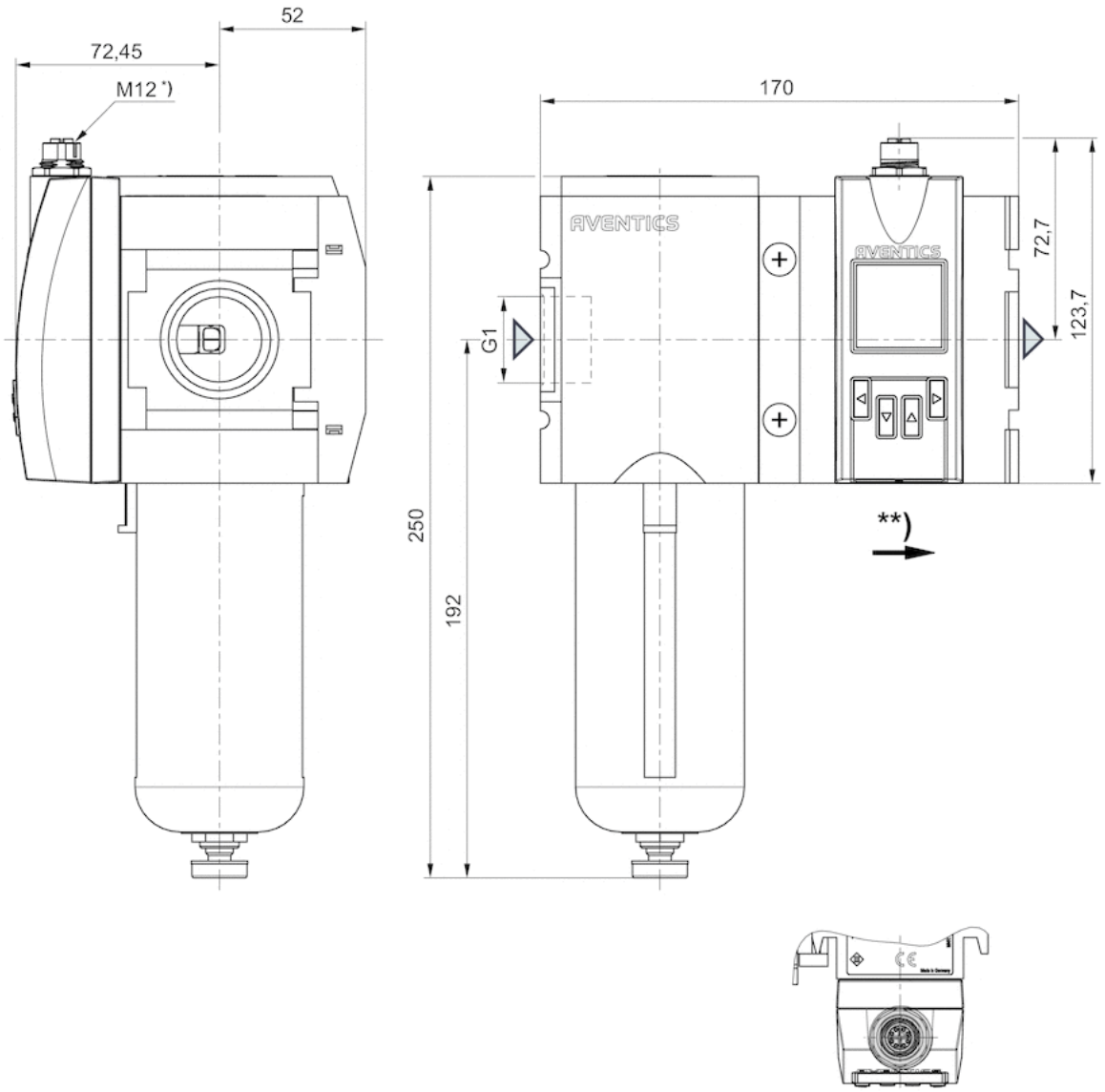

* Internal thread
** Flow direction

Pin assignments

Pin assignments, M12, X-coded

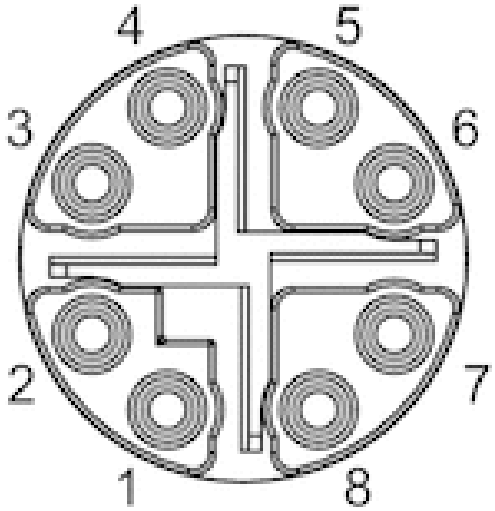

Pin	1	2	3	4	7	8	5
Color	WH / OG	OG	WH / GN	GN	WH / BU	BU	WH / BN
Function	TX(+) + POE	TX(-) + POE	RX(+) - POE	RX(-) - POE	POE+	POE+	POE-

6
BN
POE-

Series AF2 flow sensor, 652 filter version, Ethernet

G652AVBP4JA001N

Series 652

- The pressure dew point must be at least 15 °C under ambient and medium temperature and may not exceed 3 °C. The protection class is only ensured when the plug is mounted properly. For detailed information, see operating instructions. Precision: Standard measurement range: ±4% of measured value, + 0.5% of final value. Extended measurement range: ±8% of measured value, + 1% of final value.

Technical data

Industry
Industrial

Note
Integrated web server, 48 VDC connection via Power over Ethernet

Switching principle
Flow measuring principle: calorimetric

Protocol
TCP/IP
OPC UA
MQTT

Nominal flow Qn min., standard
8 l/min

Nominal flow Qn max., standard
1630 l/min

Nominal flow Qn min., extended
1630 l/min

Nominal flow Qn max., extended
2445 l/min

Compressed air connection
G 1/2

Certificates
CE declaration of conformity
RoHS

Working pressure min.
0 bar

Working pressure max
16 bar

Min. ambient temperature
-20 °C

Max. ambient temperature
50 °C

Min. medium temperature
-20 °C

Max. medium temperature
50 °C

Medium
Compressed air
Argon
Nitrogen
Helium
Carbon dioxide

filter porosity
5 µm

Display
OLED

Flow display unit
l/sec
l/min
m³/min

m³/h
ft³/s
m³/min

Pressure display unit
bar
psi

Temperature display unit
°C
°F

Electrical connection
Plug

Electrical connection
M12x1

Electrical connection
8-pin

Power consumption max.
5 W

Operating voltage DC, min.
36 V DC

Operating voltage DC, max.
57 V DC

Response time
< 0.3 s

Shock resistance max.
30 g, 11 ms

Vibration resistance
1 g (10 - 2000 Hz) IEC 60068 - 2-6

Reproducibility
± 1.5% of the measured value

Protection class
IP65
IP67 according to IEC 60529

Weight
0.73 kg

Material

Housing material
Polyamide
Polycarbonate
Aluminum

Seal material filter
Nitrile butadiene rubber

Seal material sensor
Fluorocarbon caoutchouc

Part No.
G652AVBP4JA001N

Dimensions in inches

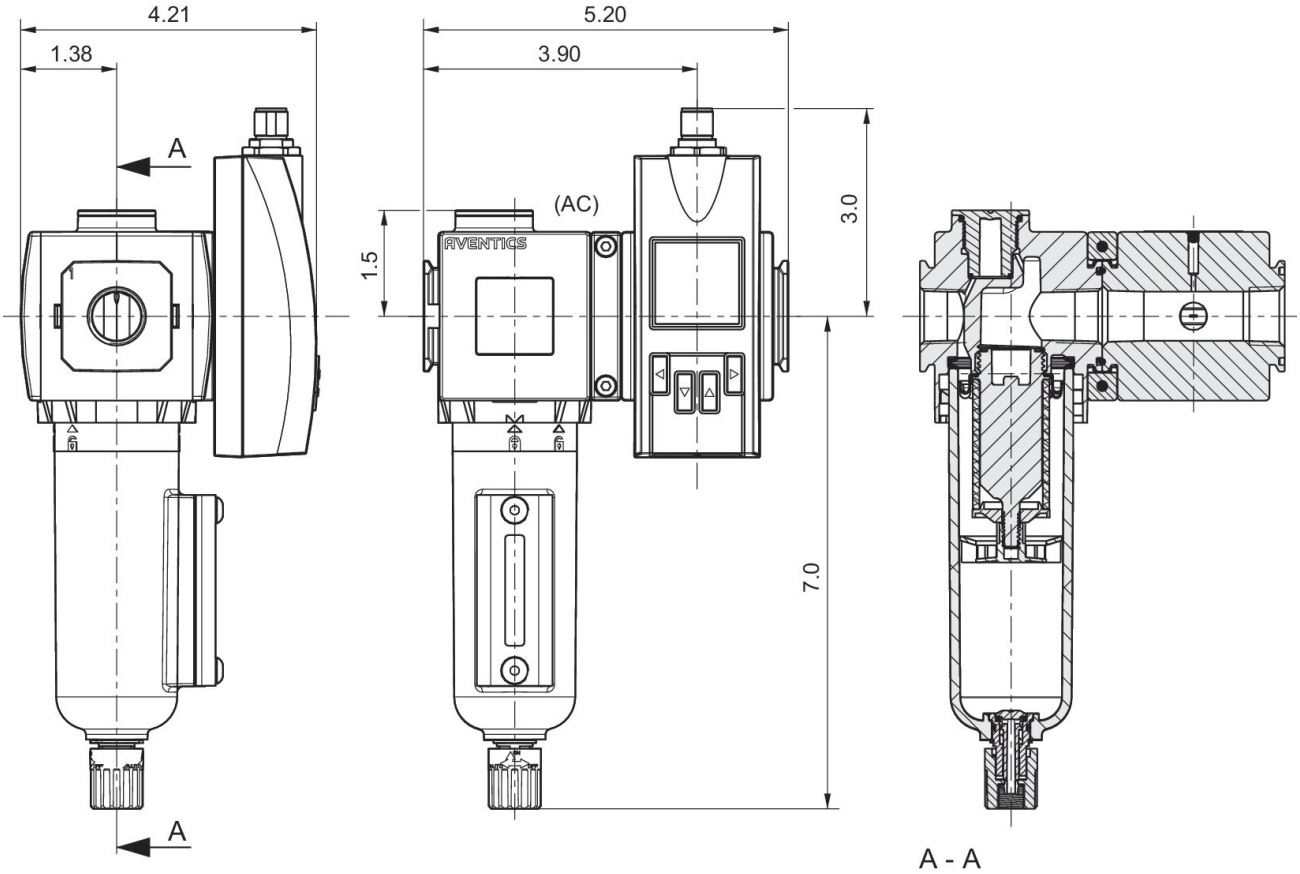

Dimensions in mm

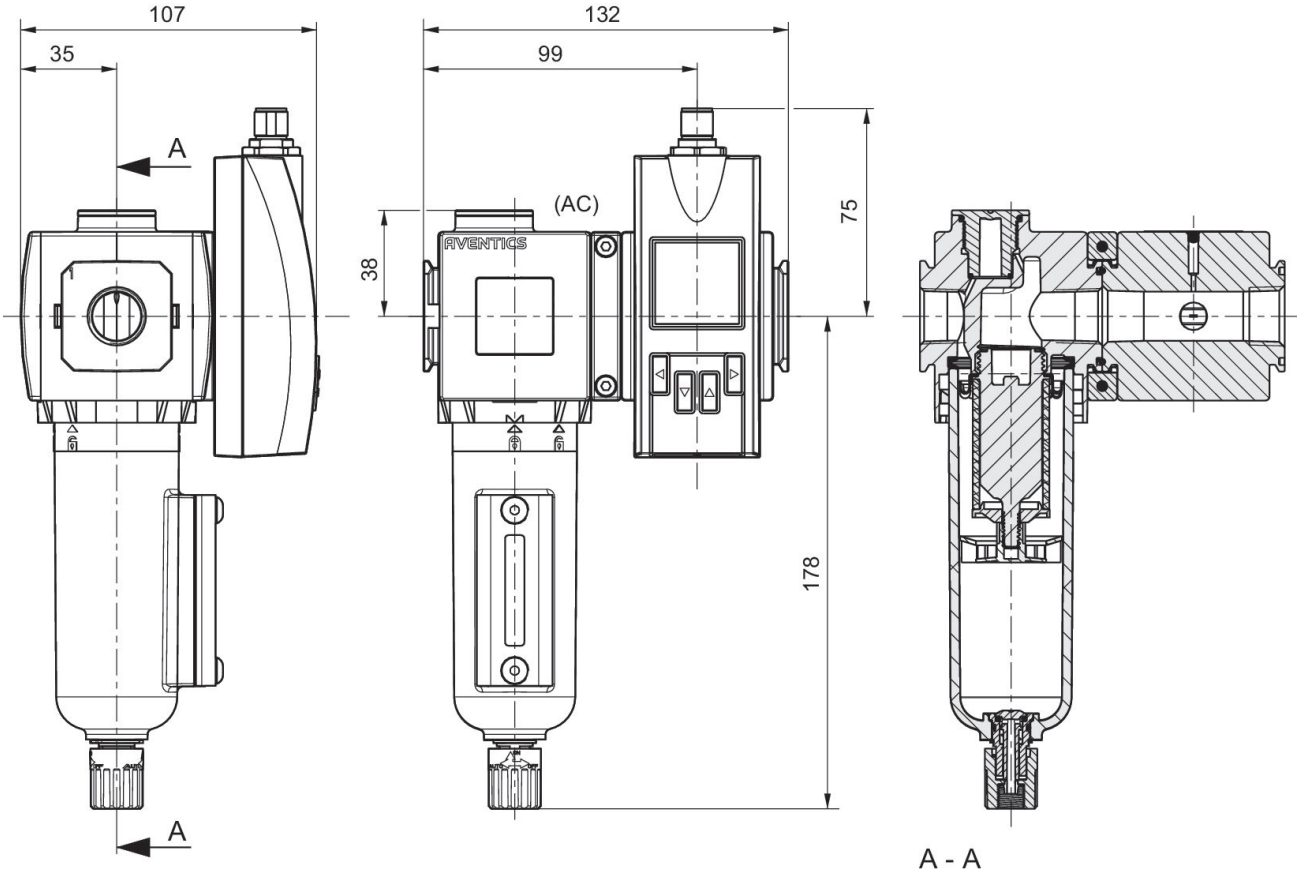

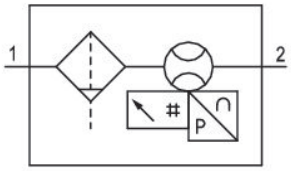

Pin assignments

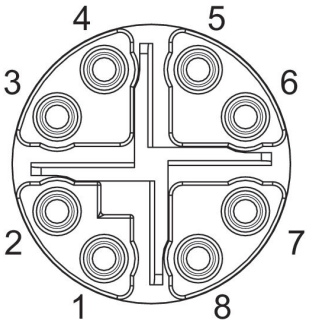

Pin	RJ45	Wire color	Identification	10/100 Mbit
1	1	WH / OG	TX(+) + POE	TxData+
2	2	OG	TX(-) + POE	TxData+

Pin	RJ45	Wire color	Identification	10/100 Mbit
3	3	WH / GN	RX(+) - POE	TxData-
4	6	GN	RX(-) - POE	TxData-
7	5	WH / BU	POE+	
8	4	BU	POE+	
5	7	WH / BN	POE-	
6	8	BN	POE-	

Series AF2 flow sensor, 652 filter version, Ethernet

8652AVBP4JA001N

Series 652

- The pressure dew point must be at least 15 °C under ambient and medium temperature and may not exceed 3 °C. The protection class is only ensured when the plug is mounted properly. For detailed information, see operating instructions. Precision: Standard measurement range: ±4% of measured value, + 0.5% of final value. Extended measurement range: ±8% of measured value, + 1% of final value.

Technical data

Industry
Industrial

Note
Integrated web server, 48 VDC connection via Power over Ethernet

Switching principle
Flow measuring principle: calorimetric

Protocol
TCP/IP
OPC UA
MQTT

Nominal flow Qn min., standard
8 l/min

Nominal flow Qn max., standard
1630 l/min

Nominal flow Qn min., extended
1630 l/min

Nominal flow Qn max., extended
2445 l/min

Compressed air connection
1/2 NPT

Certificates
CE declaration of conformity
RoHS

Working pressure min.
0 bar

Working pressure max
16 bar

Min. ambient temperature
-20 °C

Max. ambient temperature
50 °C

Min. medium temperature
-20 °C

Max. medium temperature
50 °C

Medium
Compressed air
Argon
Nitrogen
Helium
Carbon dioxide

filter porosity
5 µm

Display
OLED

Flow display unit
l/sec
l/min
m³/min

m³/h
ft³/s
m³/min

Pressure display unit
bar
psi

Temperature display unit
°C
°F

Electrical connection
Plug

Electrical connection
M12x1

Electrical connection
8-pin

Power consumption max.
5 W

Operating voltage DC, min.
36 V DC

Operating voltage DC, max.
57 V DC

Response time
< 0.3 s

Shock resistance max.
30 g, 11 ms

Vibration resistance
1 g (10 - 2000 Hz) IEC 60068 - 2-6

Reproducibility
± 1.5% of the measured value

Protection class
IP65
IP67 according to IEC 60529

Weight
0.73 kg

Material

Housing material
Polyamide
Polycarbonate
Aluminum

Seal material filter
Nitrile butadiene rubber

Seal material sensor
Fluorocarbon caoutchouc

Part No.
8652AVBP4JA001N

Dimensions in inches

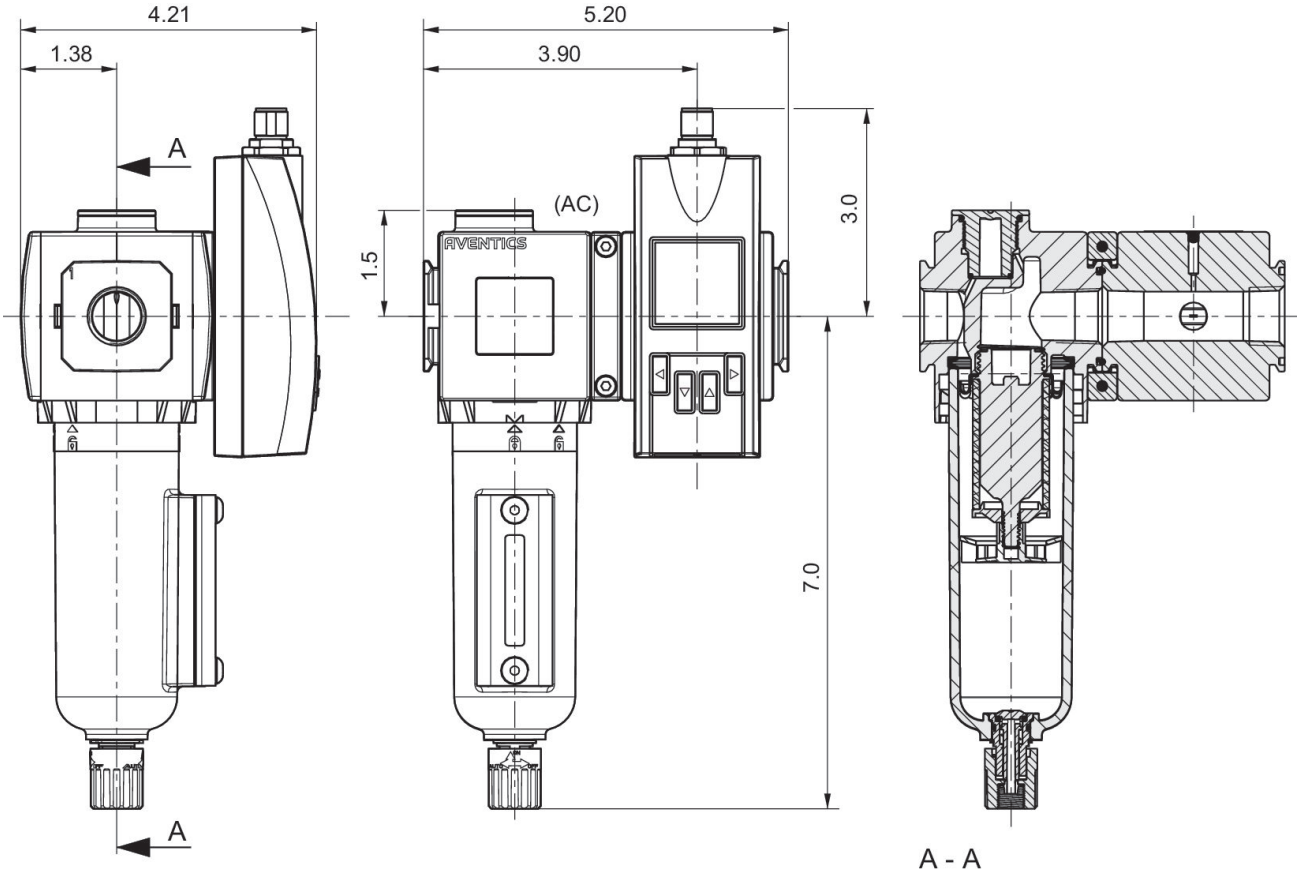

Dimensions in mm

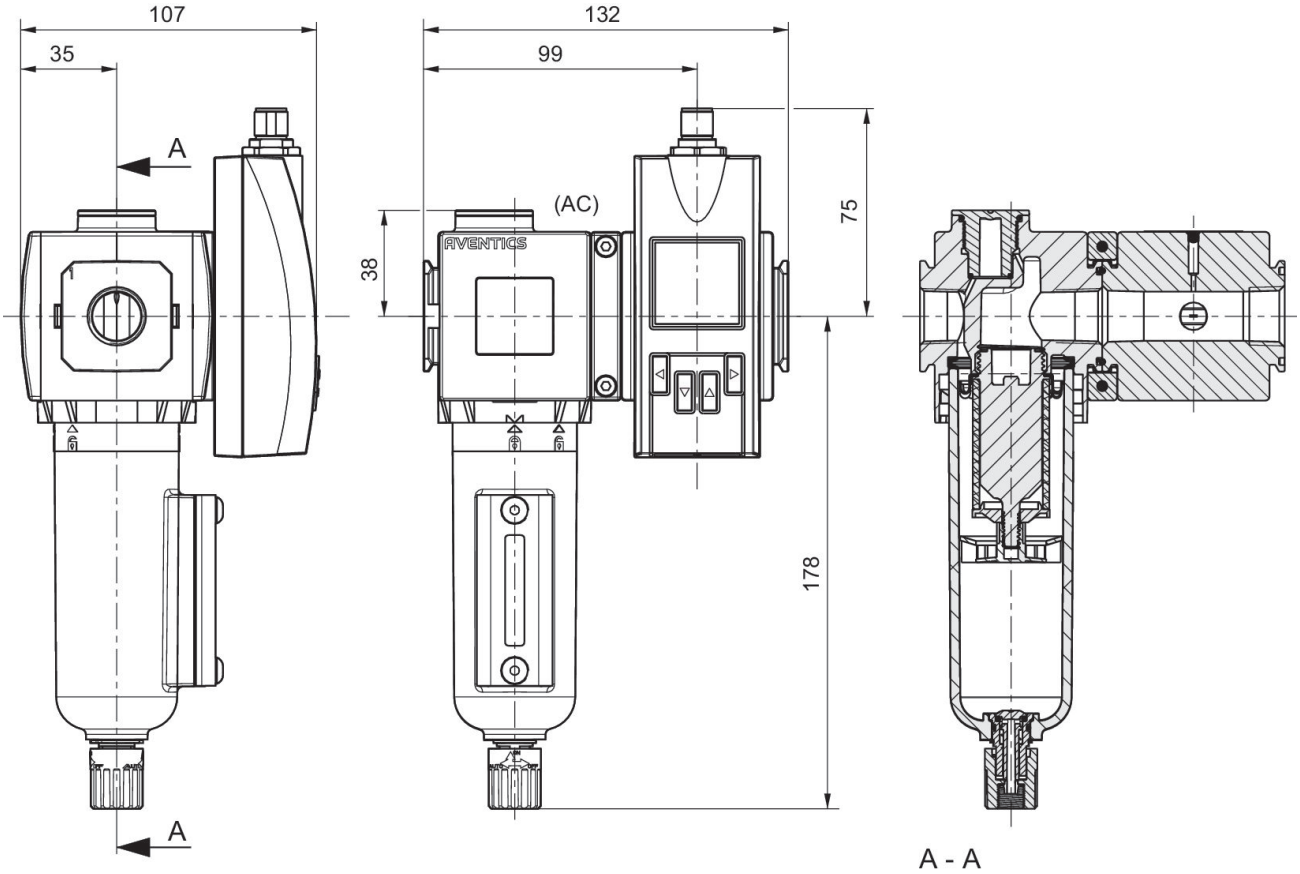

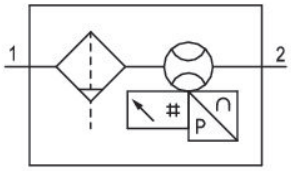

Pin assignments

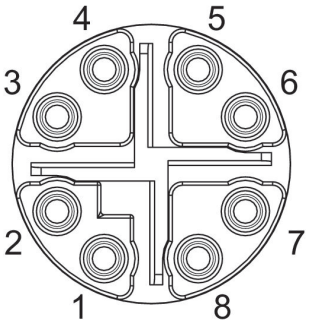

Pin	RJ45	Wire color	Identification	10/100 Mbit
1	1	WH / OG	TX(+) + POE	TxData+
2	2	OG	TX(-) + POE	TxData+

Pin	RJ45	Wire color	Identification	10/100 Mbit
3	3	WH / GN	RX(+) - POE	TxData-
4	6	GN	RX(-) - POE	TxData-
7	5	WH / BU	POE+	
8	4	BU	POE+	
5	7	WH / BN	POE-	
6	8	BN	POE-	

Series AF2 flow sensor, 652 filter version, IO-Link

G652AVBP4JA000N

Series 652

- The pressure dew point must be at least 15 °C under ambient and medium temperature and may not exceed 3 °C. The protection class is only ensured when the plug is mounted properly. For detailed information, see operating instructions. Precision: Standard measurement range: ±4% of measured value, + 0.5% of final value. Extended measurement range: ±8% of measured value, + 1% of final value.

Technical data

Industry
Industrial

Note
Output signal: 1 analog output 4 mA ... 20 mA + 1 digital/ analog output (PNP, NPN, push-pull, 4 mA ... 20 mA / switchable)+1 digital output (PNP, NPN, push-pull, switchable), IO-Link V1.1 (COM3 / 230K4 baud)

Frame size
652

Switching principle
Flow measuring principle: calorimetric

Protocol
IO-Link

Nominal flow Qn min., standard
8 l/min

Nominal flow Qn max., standard
1630 l/min

Nominal flow Qn min., extended
1630 l/min

Nominal flow Qn max., extended
2445 l/min

Compressed air connection
G 1/2

Certificates
CE declaration of conformity

RoHS

Working pressure min.
0 bar

Working pressure max
16 bar

Min. ambient temperature
-20 °C

Max. ambient temperature
50 °C

Min. medium temperature
-20 °C

Max. medium temperature
50 °C

Medium
Compressed air
Argon
Nitrogen
Helium
Carbon dioxide

filter porosity
5 µm

Display
OLED

Flow display unit
l/sec
l/min

m³/min
m³/h
ft³/s
m³/min

Pressure display unit
bar
psi

Temperature display unit
°C
°F

Electrical connection
Plug

Electrical connection
M12x1

Electrical connection
5-pin

Electrical connection
A-coded

Output signal digital
PNP/NPN/push-pull, switchable

Output signal analog
4 ... 20 mA

Power consumption max.
12 W

Operating voltage DC, min.
17 V DC

Operating voltage DC, max.
30 V DC

Response time
< 0.3 s

Short circuit resistance
short circuit resistant

Shock resistance max.
30 g, 11 ms

Vibration resistance
1 g (10 - 2000 Hz) IEC 60068 - 2-6

Reproducibility
± 1.5% of the measured value

Protection class
IP65
IP67 according to IEC 60529

Weight
0.73 kg

Material

Housing material
Polyamide
Polycarbonate
Aluminum

Seal material filter
Nitrile butadiene rubber

Seal material sensor
Fluorocarbon caoutchouc

Part No.
G652AVBP4JA000N

Dimensions in inches

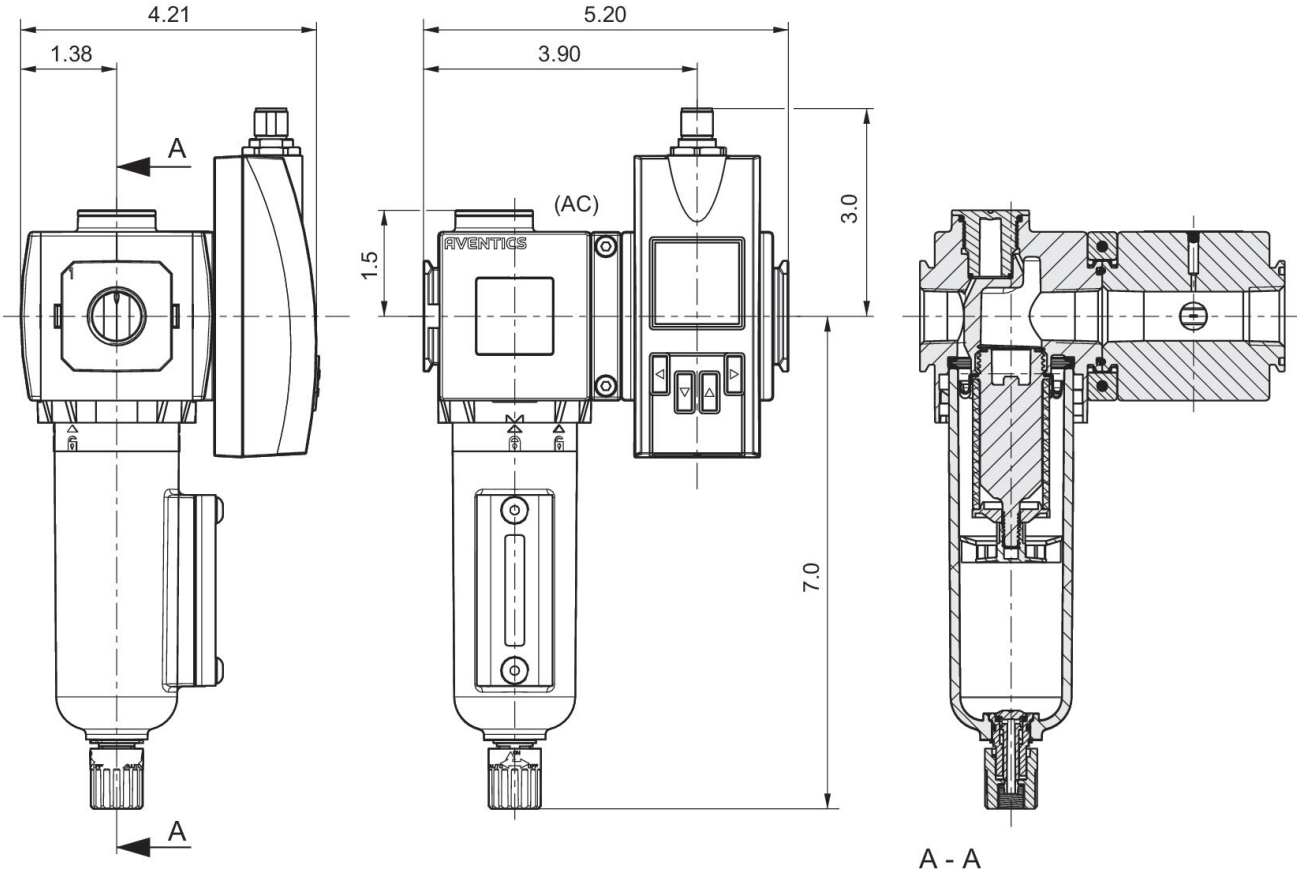

Dimensions in mm

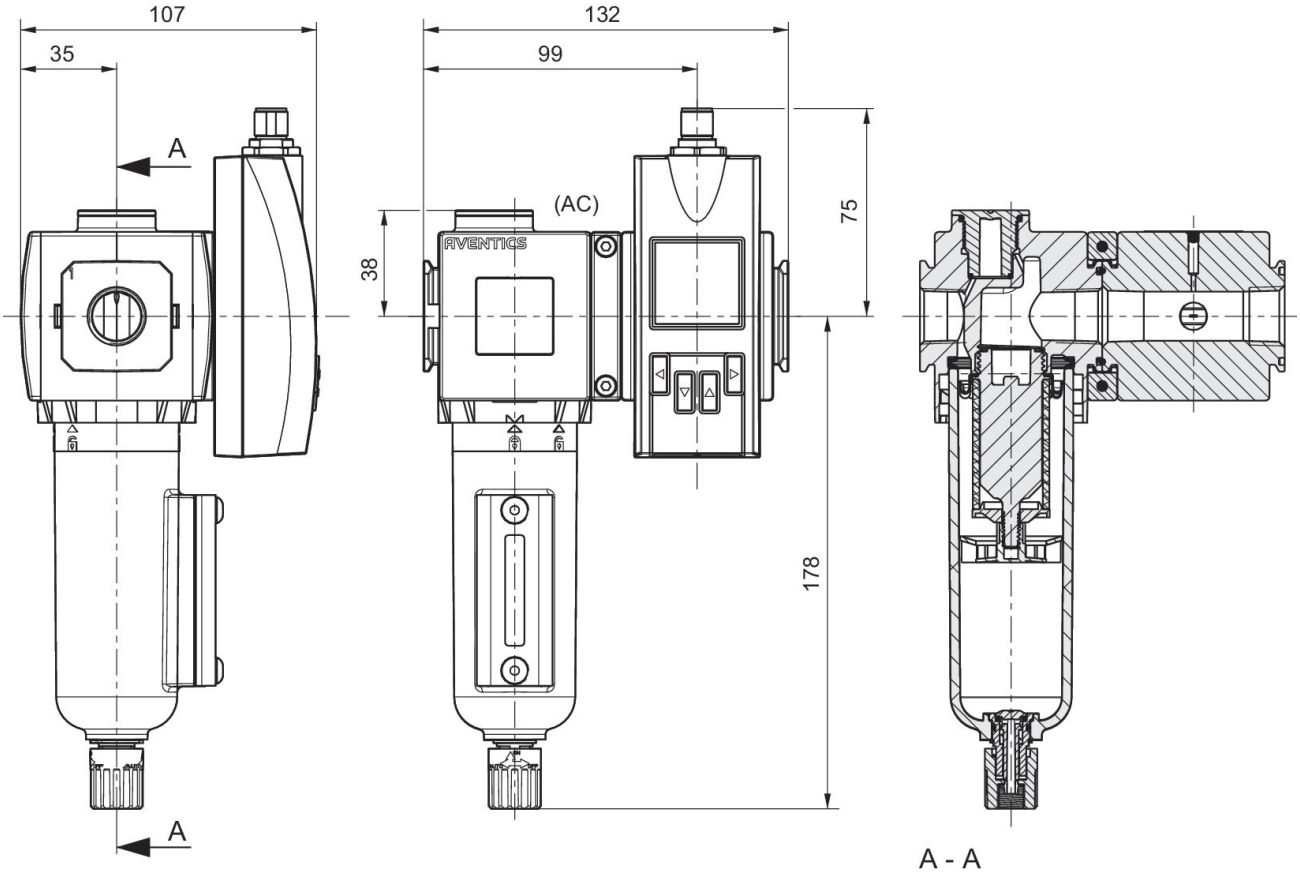

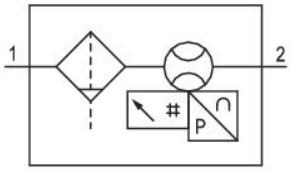

Pin assignments

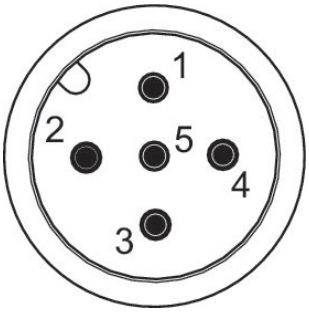

Pin	Allocation	Wire color	
1	L+	brown	Supply Voltage
2	QA (output 4 ... 20 mA)	white	
3	m = mass	blue	

Pin	Allocation	Wire color	
4	C/Q1 (IO-Link/switch output)	black	
5	Analog output 4 ... 20 mA	yellow	

Series AF2 flow sensor, 652 filter version, IO-Link

8652AVBP4JA000N

Series 652

- The pressure dew point must be at least 15 °C under ambient and medium temperature and may not exceed 3 °C. The protection class is only ensured when the plug is mounted properly. For detailed information, see operating instructions. Precision: Standard measurement range: ±4% of measured value, + 0.5% of final value. Extended measurement range: ±8% of measured value, + 1% of final value.

Technical data

Industry
Industrial

Frame size
652

Switching principle
Flow measuring principle: calorimetric

Protocol
IO-Link

Nominal flow Qn min., standard
8 l/min

Nominal flow Qn max., standard
1630 l/min

Nominal flow Qn min., extended
1630 l/min

Nominal flow Qn max., extended
2445 l/min

Compressed air connection
1/2 NPT

Certificates
CE declaration of conformity
RoHS

Working pressure min.
0 bar

Working pressure max
16 bar

Min. ambient temperature
-20 °C

Max. ambient temperature
50 °C

Min. medium temperature
-20 °C

Max. medium temperature
50 °C

Medium
Compressed air
Argon
Nitrogen
Helium
Carbon dioxide

filter porosity
5 µm

Display
OLED

Flow display unit
l/sec
l/min
m³/min
m³/h
ft³/s

m³/min

Pressure display unit
bar
psi

Temperature display unit
°C
°F

Electrical connection
Plug

Electrical connection
M12x1

Electrical connection
5-pin

Electrical connection
A-coded

Output signal analog
4 ... 20 mA

Power consumption max.
12 W

Operating voltage DC, min.
17 V DC

Operating voltage DC, max.
30 V DC

Response time
< 0.3 s

Short circuit resistance
short circuit resistant

Shock resistance max.
30 g, 11 ms

Vibration resistance
1 g (10 - 2000 Hz) IEC 60068 - 2-6

Reproducibility
± 1.5% of the measured value

Protection class
IP65
IP67 according to IEC 60529

Weight
0.73 kg

Material

Housing material
Polyamide
Polycarbonate
Aluminum

Seal material filter
Nitrile butadiene rubber

Seal material sensor
Fluorocarbon caoutchouc

Part No.
8652AVBP4JA000N

Dimensions in inches

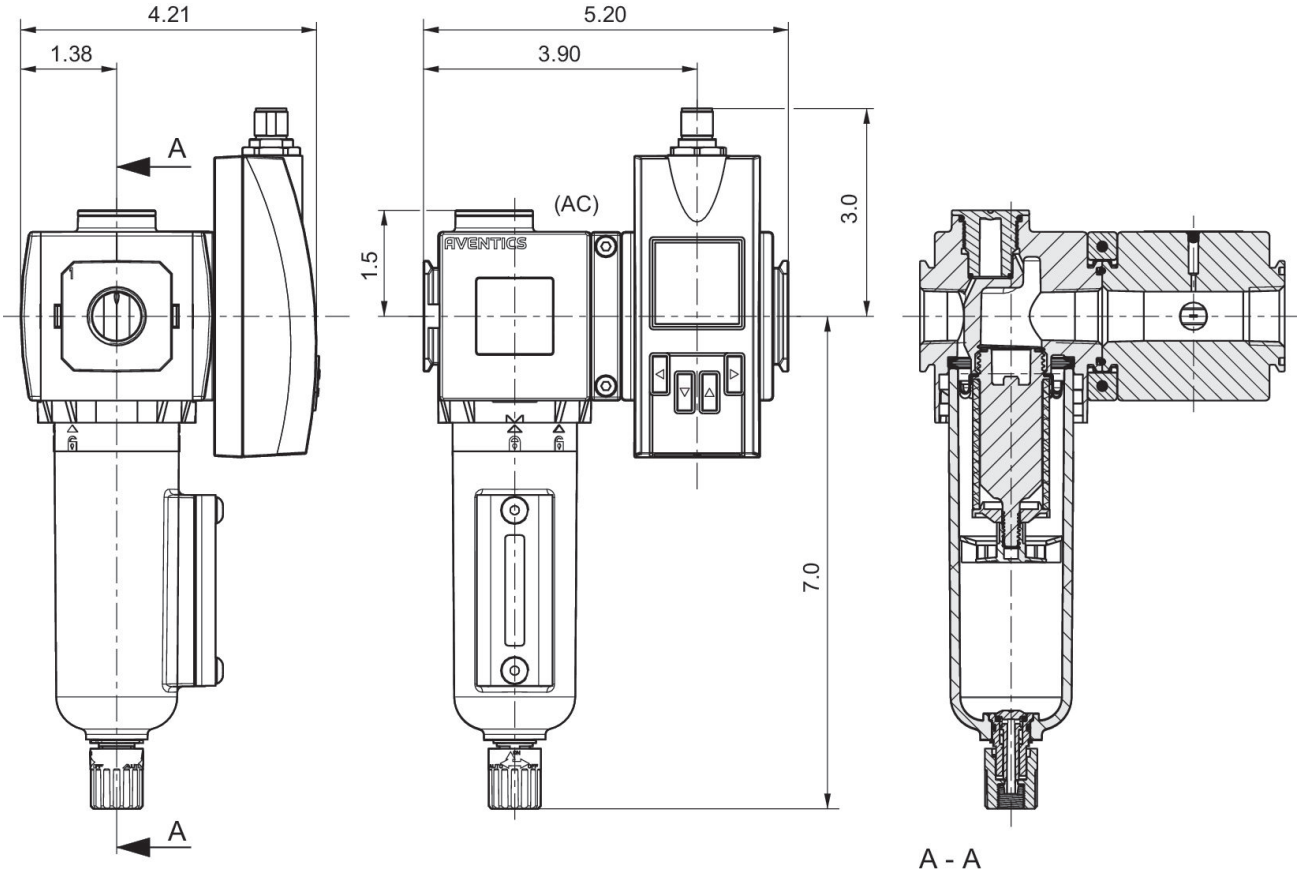

Dimensions in mm

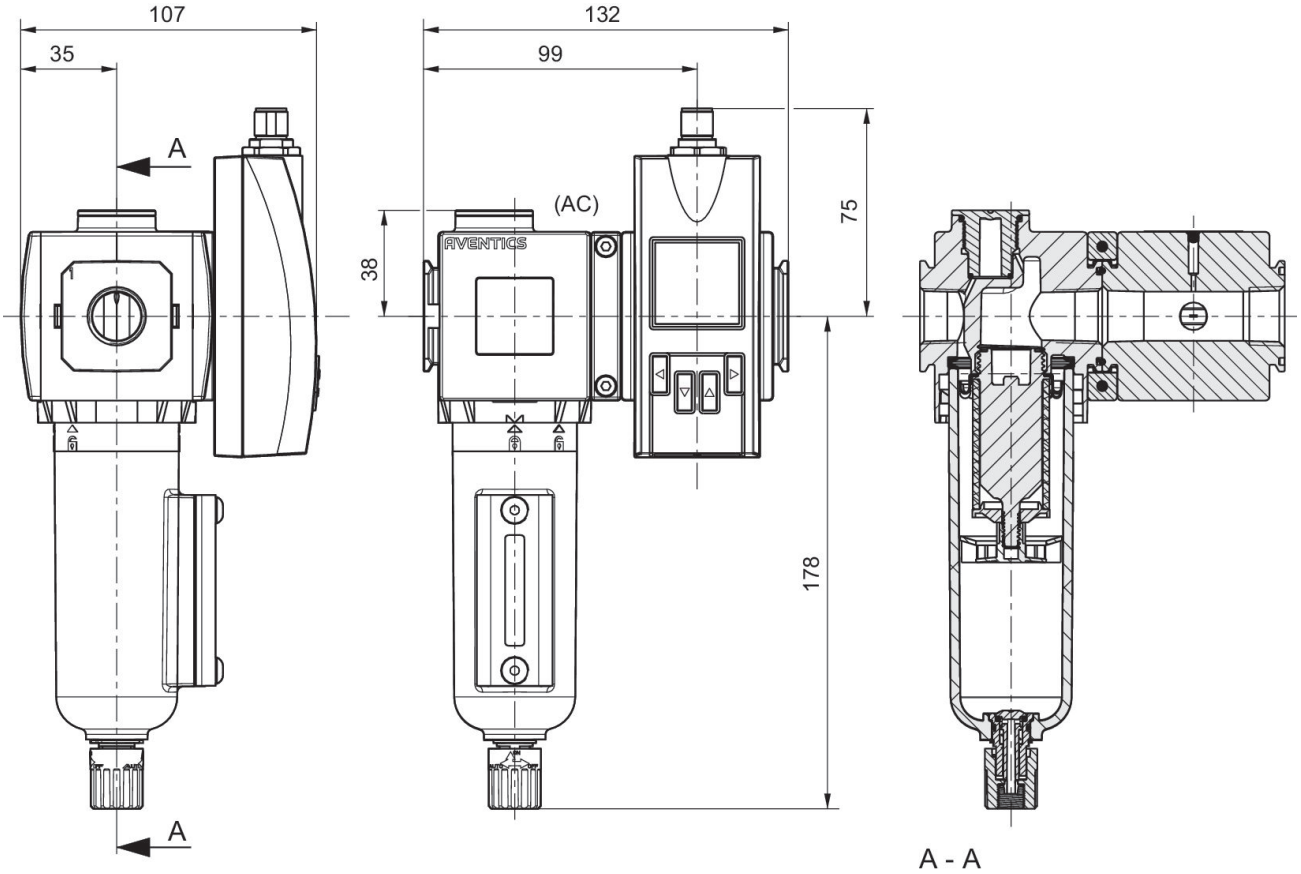

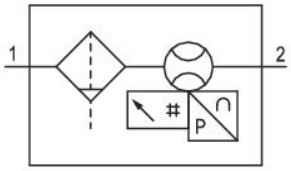

Pin assignments

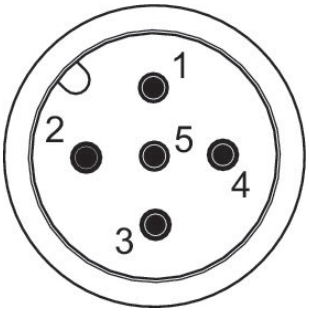

Pin	Allocation	Wire color	
1	L+	brown	Supply Voltage
2	QA (output 4 ... 20 mA)	white	
3	m = mass	blue	

Pin	Allocation	Wire color	
4	C/Q1 (IO-Link/switch output)	black	
5	Analog output 4 ... 20 mA	yellow	

Series AF2 flow sensor, 652 pipe version with pipe, Ethernet

G652AV004JA0010

Series 652

- The pressure dew point must be at least 15 °C under ambient and medium temperature and may not exceed 3 °C. The protection class is only ensured when the plug is mounted properly. For detailed information, see operating instructions. Liquid oil or water must be separated via prefiltering. If it is not separated sufficiently, drifting may result. Precision: Standard measurement range: ±3% of measured value, + 0.3% of final value. Extended measurement range: ±8% of measured value, + 1% of final value.

Technical data

Industry
Industrial

Note
Integrated web server, 48 VDC connection via Power over Ethernet

Switching principle
Flow measuring principle: calorimetric

Protocol
TCP/IP
OPC UA
MQTT

Nominal flow Qn min., standard
5.3 l/min

Nominal flow Qn max., standard
1060 l/min

Nominal flow Qn min., extended
1060 l/min

Nominal flow Qn max., extended
1590 l/min

Compressed air connection
G 1/2

Certificates
CE declaration of conformity
RoHS

Working pressure min.
0 bar

Working pressure max
16 bar

Min. ambient temperature
-20 °C

Max. ambient temperature
60 °C

Min. medium temperature
-20 °C

Max. medium temperature
60 °C

Medium
Compressed air
Argon

Nitrogen
Helium
Carbon dioxide

Display
OLED

Flow display unit
l/sec
l/min
m³/min
m³/h
ft³/s
m³/min

Pressure display unit
bar
psi

Temperature display unit
°C
°F

Electrical connection
Plug

Electrical connection
M12x1

Electrical connection
8-pin

Power consumption max.
5 W

Operating voltage DC, min.
36 V DC

Operating voltage DC, max.
57 V DC

Response time
< 0.3 s

Shock resistance max.
30 g, 11 ms

Vibration resistance
1 g (10 - 2000 Hz) IEC 60068 - 2-6

Reproducibility
± 1.5% of the measured value

Protection class
IP65
IP67 according to IEC 60529

Weight
0.805 kg

Material

Housing material
Polyamide
Polycarbonate
Aluminum

Pipe material
Stainless Steel

Seal material sensor
Fluorocarbon caoutchouc

Part No.
G652AV004JA0010

Dimensions in mm

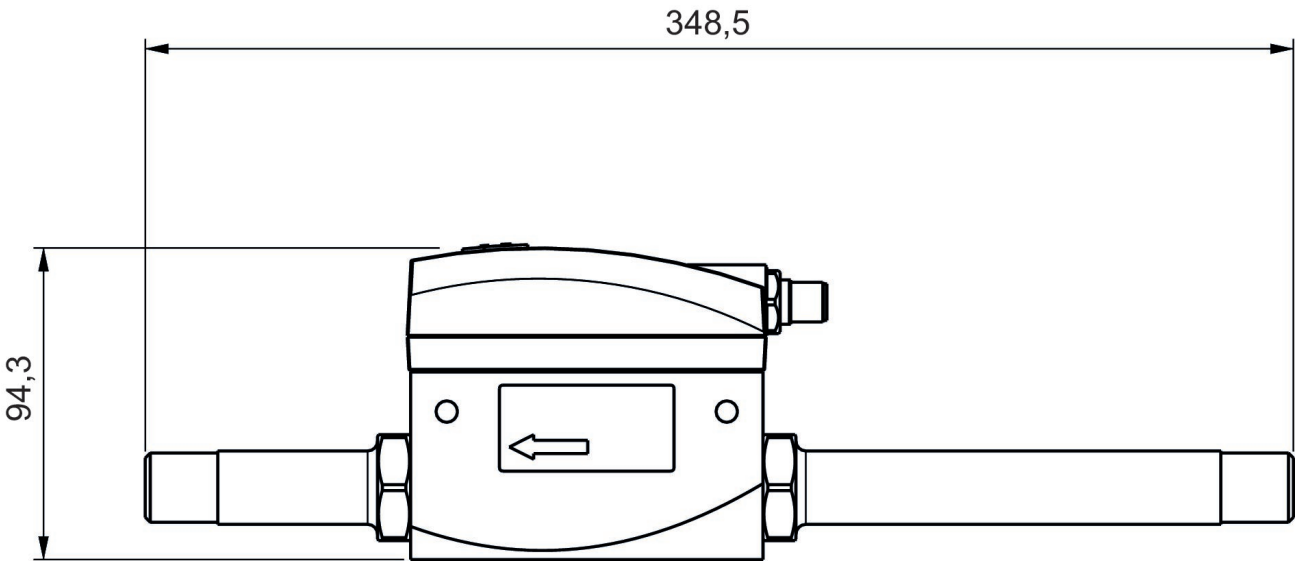

Dimensions in inches

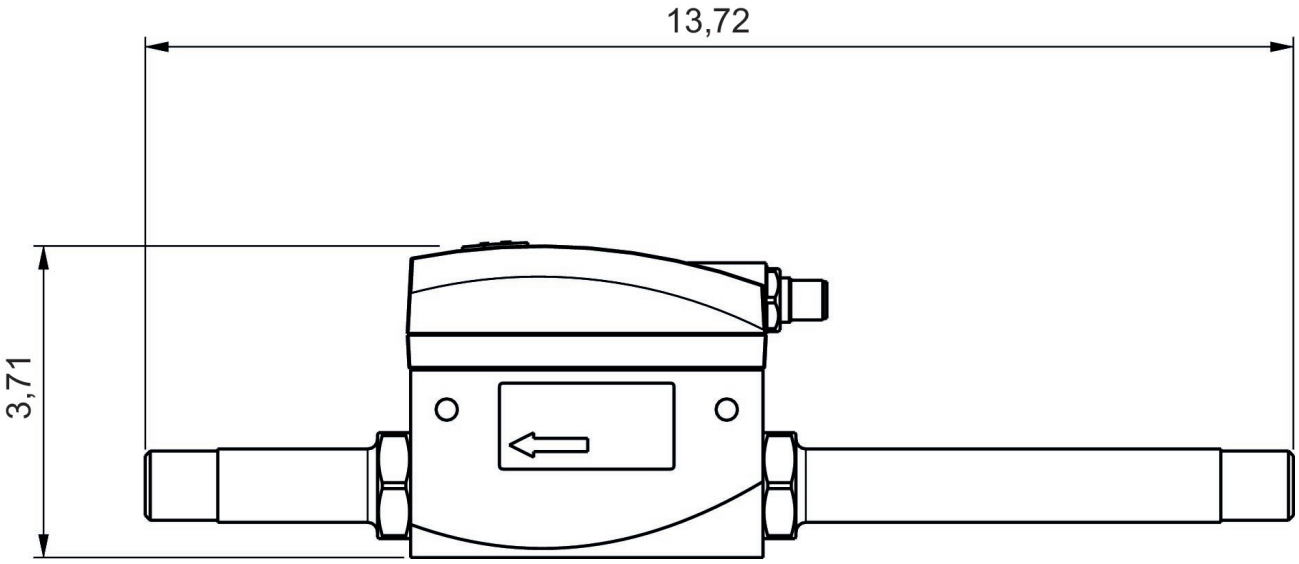

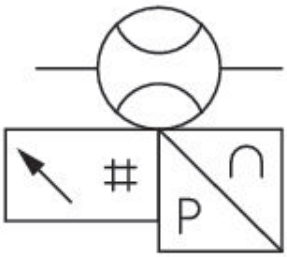

Pin assignments

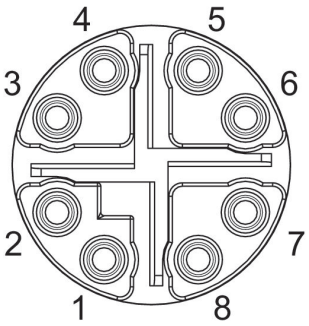

Pin	RJ45	Wire color	Identification	10/100 Mbit
1	1	WH / OG	TX(+) + POE	TxData+
2	2	OG	TX(-) + POE	TxData+
3	3	WH / GN	RX(+) - POE	TxData-
4	6	GN	RX(-) - POE	TxData-
7	5	WH / BU	POE+	
8	4	BU	POE+	
5	7	WH / BN	POE-	
6	8	BN	POE-	

Series AF2 flow sensor, 652 pipe version with pipe, Ethernet

8652AV004JA0010

Series 652

- The pressure dew point must be at least 15 °C under ambient and medium temperature and may not exceed 3 °C. The protection class is only ensured when the plug is mounted properly. For detailed information, see operating instructions. Liquid oil or water must be separated via prefiltering. If it is not separated sufficiently, drifting may result. Precision: Standard measurement range: ±3% of measured value, + 0.3% of final value. Extended measurement range: ±8% of measured value, + 1% of final value.

Technical data

Industry
Industrial

Note
Integrated web server, 48 VDC connection via Power over Ethernet

Switching principle
Flow measuring principle: calorimetric

Protocol
TCP/IP
OPC UA
MQTT

Nominal flow Qn min., standard
5.3 l/min

Nominal flow Qn max., standard
1060 l/min

Nominal flow Qn min., extended
1060 l/min

Nominal flow Qn max., extended
1590 l/min

Compressed air connection
1/2 NPT

Certificates
CE declaration of conformity
RoHS

Working pressure min.
0 bar

Working pressure max
16 bar

Min. ambient temperature
-20 °C

Max. ambient temperature
60 °C

Min. medium temperature
-20 °C

Max. medium temperature
60 °C

Medium
Compressed air
Argon

Nitrogen
Helium
Carbon dioxide

Display
OLED

Flow display unit
l/sec
l/min
m³/min
m³/h
ft³/s
m³/min

Pressure display unit
bar
psi

Temperature display unit
°C
°F

Electrical connection
Plug

Electrical connection
M12x1

Electrical connection
8-pin

Power consumption max.
5 W

Operating voltage DC, min.
36 V DC

Operating voltage DC, max.
57 V DC

Response time
< 0.3 s

Shock resistance max.
30 g, 11 ms

Vibration resistance
1 g (10 - 2000 Hz) IEC 60068 - 2-6

Reproducibility
± 1.5% of the measured value

Protection class
IP65
IP67 according to IEC 60529

Weight
0.805 kg

Material

Housing material
Polyamide
Polycarbonate
Aluminum

Pipe material
Stainless Steel

Seal material sensor
Fluorocarbon caoutchouc

Part No.
8652AV004JA0010

Dimensions in mm

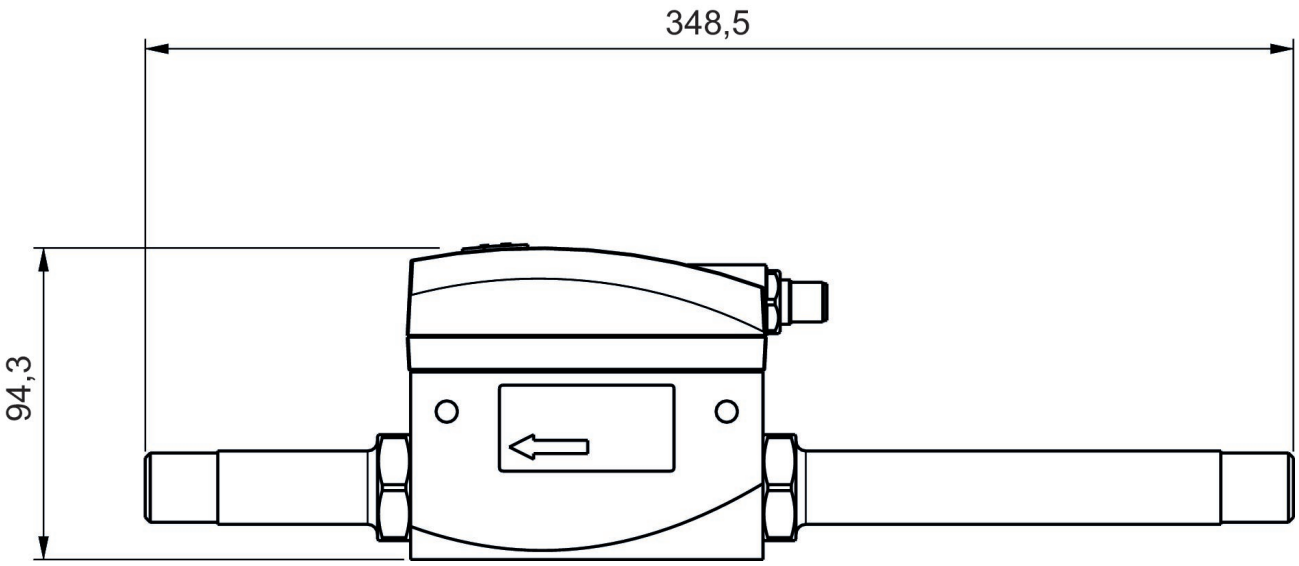

Dimensions in inches

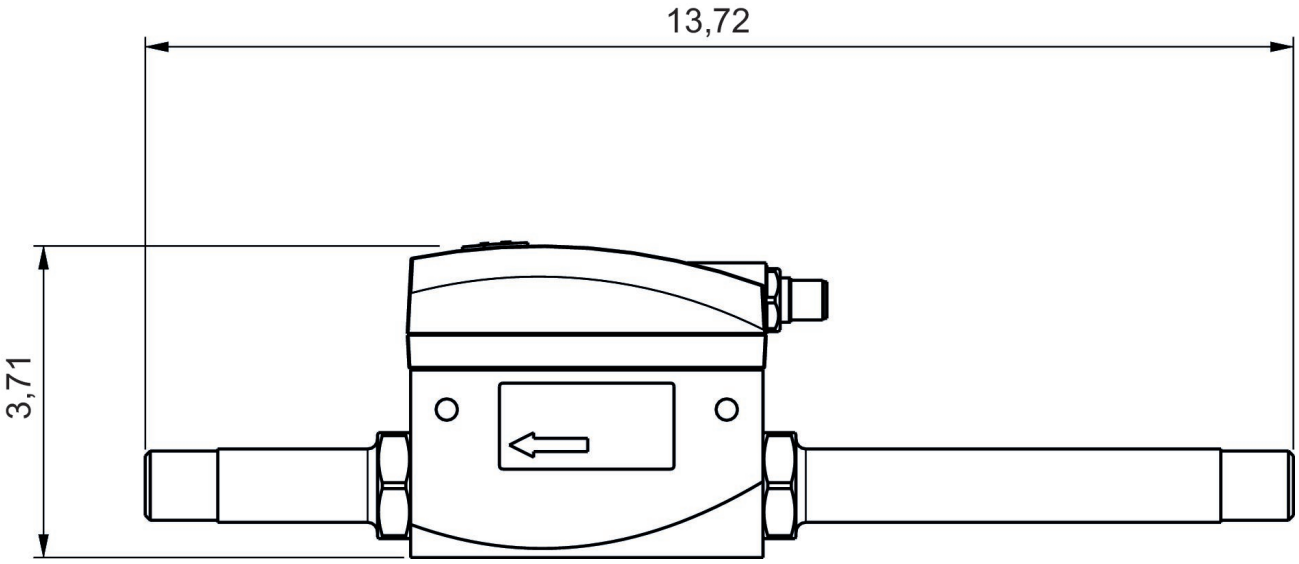

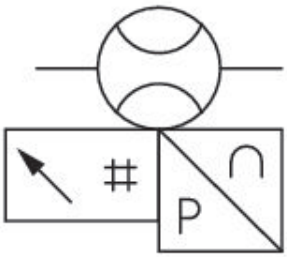

Pin assignments

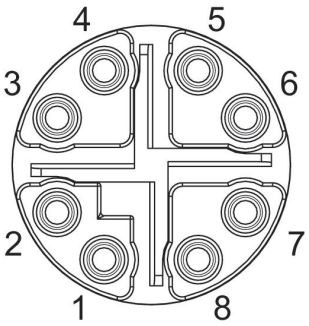

Pin	RJ45	Wire color	Identification	10/100 Mbit
1	1	WH / OG	TX(+) + POE	TxData+
2	2	OG	TX(-) + POE	TxData+
3	3	WH / GN	RX(+) - POE	TxData-
4	6	GN	RX(-) - POE	TxData-
7	5	WH / BU	POE+	
8	4	BU	POE+	
5	7	WH / BN	POE-	
6	8	BN	POE-	

Series AF2 flow sensor, 652 pipe version with pipe, IO-Link

8652AV004JA0000

Series 652

- The pressure dew point must be at least 15 °C under ambient and medium temperature and may not exceed 3 °C. The protection class is only ensured when the plug is mounted properly. For detailed information, see operating instructions. Liquid oil or water must be separated via prefiltering. If it is not separated sufficiently, drifting may result. Precision: Standard measurement range: ±3% of measured value, + 0.3% of final value. Extended measurement range: ±8% of measured value, + 1% of final value.

Technical data

Industry
Industrial

Note
Output signal: 1 analog output 4 mA ... 20 mA + 1 digital/analog output (PNP, NPN, push-pull, 4 mA ... 20 mA / switchable)+1 digital output (PNP, NPN, push-pull, switchable), IO-Link V1.1 (COM3 / 230K4 baud)

Switching principle
Flow measuring principle: calorimetric

Protocol
IO-Link

Nominal flow Qn min., standard
5.3 l/min

Nominal flow Qn max., standard
1060 l/min

Nominal flow Qn min., extended
1060 l/min

Nominal flow Qn max., extended
1590 l/min

Compressed air connection
1/2 NPT

Certificates
CE declaration of conformity
RoHS

Working pressure min.
0 bar

Working pressure max
16 bar

Min. ambient temperature
-20 °C

Max. ambient temperature
60 °C

Min. medium temperature
-20 °C

Max. medium temperature
60 °C

Medium
Compressed air
Argon

Nitrogen
Helium
Carbon dioxide

Display
OLED

Flow display unit
l/sec
l/min
m³/min
m³/h
ft³/s
m³/min

Pressure display unit
bar
psi

Temperature display unit
°C
°F

Electrical connection
Plug

Electrical connection
M12x1

Electrical connection
5-pin

Electrical connection
A-coded

Output signal digital
PNP/NPN/push-pull, switchable

Output signal analog
4 ... 20 mA

Power consumption max.
12 W

Operating voltage DC, min.
17 V DC

Operating voltage DC, max.
30 V DC

Response time
< 0.3 s

Short circuit resistance
short circuit resistant

Shock resistance max.
30 g, 11 ms

Vibration resistance
1 g (10 - 2000 Hz) IEC 60068 - 2-6

Reproducibility
± 1.5% of the measured value

Protection class
IP65
IP67 according to IEC 60529

Weight
0.805 kg

Material

Housing material
Polyamide
Polycarbonate
Aluminum

Pipe material
Stainless Steel

Seal material sensor
Fluorocarbon caoutchouc

Part No.
8652AV004JA0000

Dimensions in mm

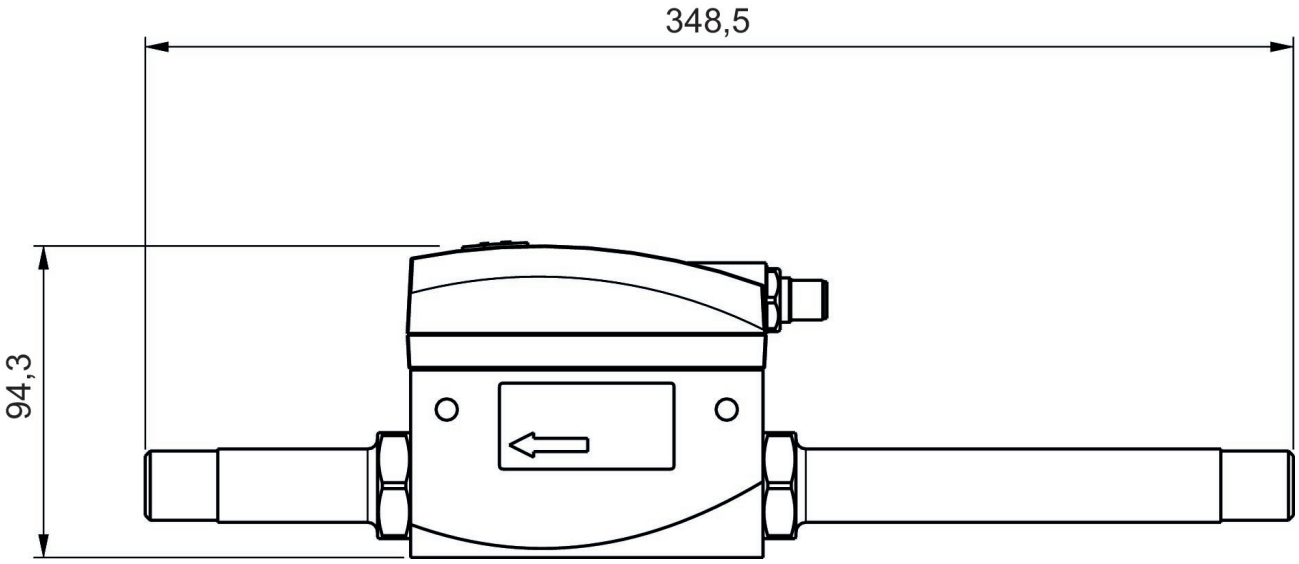

Dimensions in inches

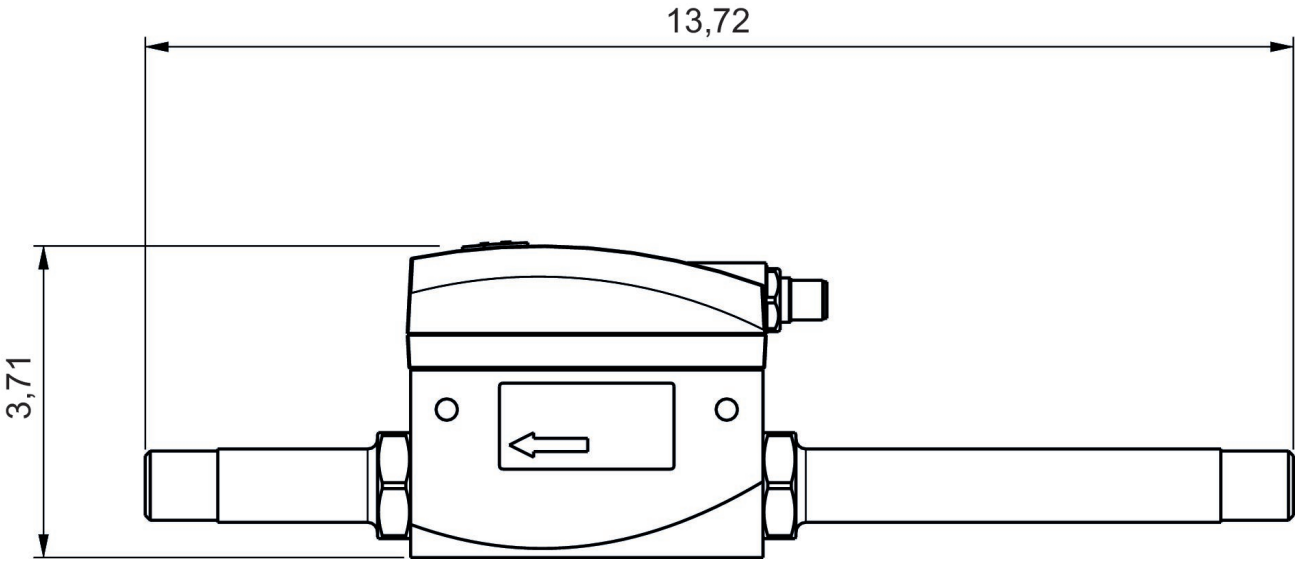

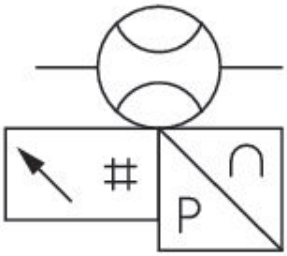

Pin assignments

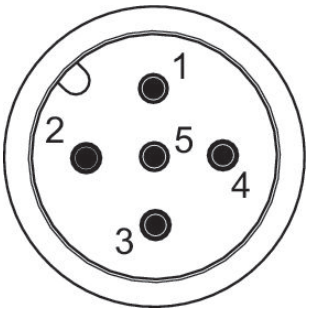

Pin	Allocation	Wire color	
1	L+	brown	Supply Voltage
2	QA (output 4 ... 20 mA)	white	
3	m = mass	blue	
4	C/Q1 (IO-Link/switch output)	black	
5	Analog output 4 ... 20 mA	yellow	

Series AF2 flow sensor, 652 pipe version with pipe, IO-Link

G652AV004JA0000

Series 652

- The pressure dew point must be at least 15 °C under ambient and medium temperature and may not exceed 3 °C. The protection class is only ensured when the plug is mounted properly. For detailed information, see operating instructions. Liquid oil or water must be separated via prefiltering. If it is not separated sufficiently, drifting may result. Precision: Standard measurement range: ±3% of measured value, + 0.3% of final value. Extended measurement range: ±8% of measured value, + 1% of final value.

Technical data

Industry
Industrial

Note
Output signal: 1 analog output 4 mA ... 20 mA + 1 digital/analog output (PNP, NPN, push-pull, 4 mA ... 20 mA / switchable)+1 digital output (PNP, NPN, push-pull, switchable), IO-Link V1.1 (COM3 / 230K4 baud)

Switching principle
Flow measuring principle: calorimetric

Protocol
IO-Link

Nominal flow Qn min., standard
5.3 l/min

Nominal flow Qn max., standard
1060 l/min

Nominal flow Qn min., extended
1060 l/min

Nominal flow Qn max., extended
1590 l/min

Compressed air connection
G 1/2

Certificates
CE declaration of conformity
RoHS

Working pressure min.
0 bar

Working pressure max
16 bar

Min. ambient temperature
-20 °C

Max. ambient temperature
60 °C

Min. medium temperature
-20 °C

Max. medium temperature
60 °C

Medium
Compressed air
Argon

Nitrogen
Helium
Carbon dioxide

Display
OLED

Flow display unit
l/sec
l/min
m³/min
m³/h
ft³/s
m³/min

Pressure display unit
bar
psi

Temperature display unit
°C
°F

Electrical connection
Plug

Electrical connection
M12x1

Electrical connection
5-pin

Electrical connection
A-coded

Output signal digital
PNP, NPN, push-pull, 1x IO-Link

Output signal analog
4 ... 20 mA

Power consumption max.
12 W

Operating voltage DC, min.
17 V DC

Operating voltage DC, max.
30 V DC

Response time
< 0.3 s

Short circuit resistance
short circuit resistant

Shock resistance max.
30 g, 11 ms

Vibration resistance
1 g (10 - 2000 Hz) IEC 60068 - 2-6

Reproducibility
± 1.5% of the measured value

Protection class
IP65
IP67 according to IEC 60529

Weight
0.805 kg

Material

Housing material
Polyamide
Polycarbonate
Aluminum

Pipe material
Stainless Steel

Seal material sensor
Fluorocarbon caoutchouc

Part No.
G652AV004JA0000

Dimensions in mm

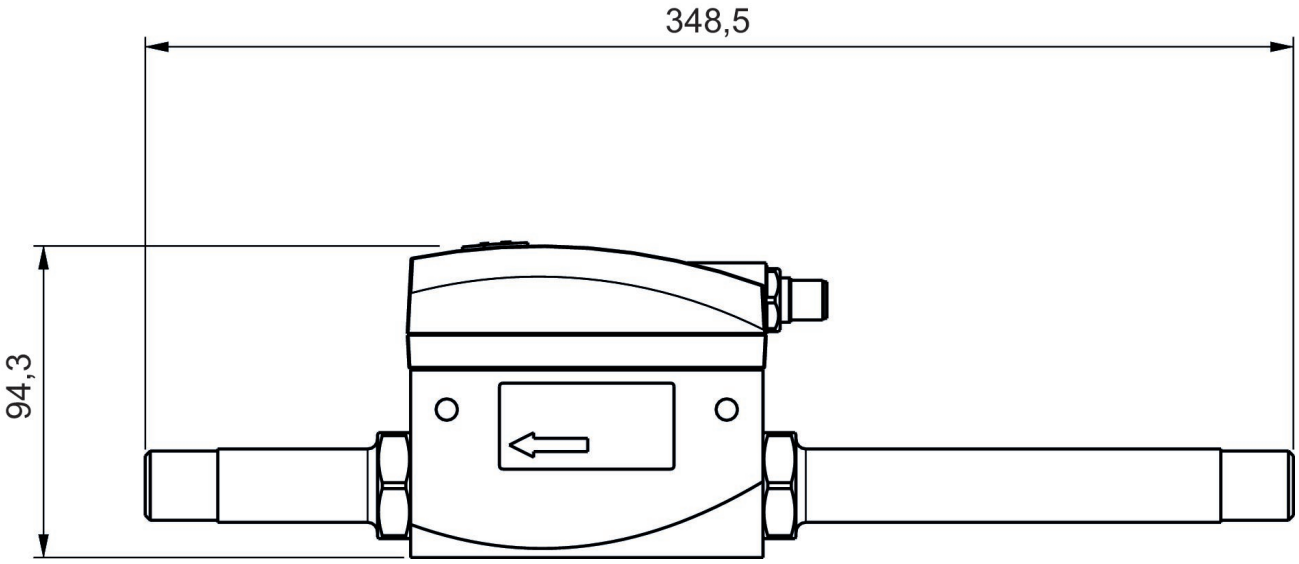

Dimensions in inches

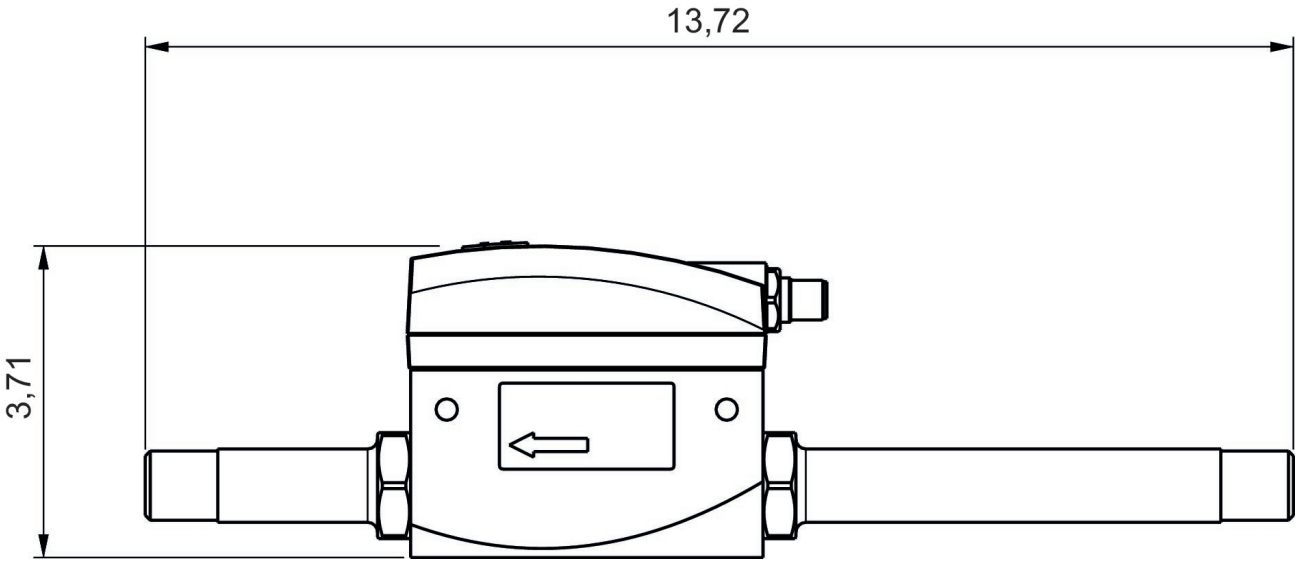

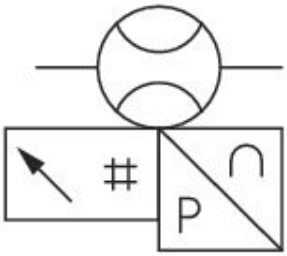

Pin assignments

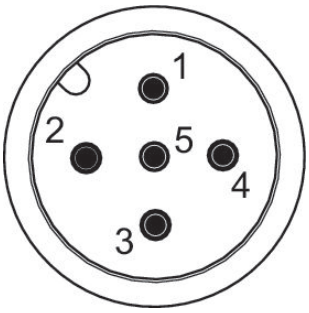

Pin	Allocation	Wire color	
1	L+	brown	Supply Voltage
2	QA (output 4 ... 20 mA)	white	
3	m = mass	blue	
4	C/Q1 (IO-Link/switch output)	black	
5	Analog output 4 ... 20 mA	yellow	

Series AF2 flow sensor, 653 pipe version with pipe, IO-Link

G653AV006JA0000

Series 653

- The pressure dew point must be at least 15 °C under ambient and medium temperature and may not exceed 3 °C. The protection class is only ensured when the plug is mounted properly. For detailed information, see operating instructions. Liquid oil or water must be separated via prefiltering. If it is not separated sufficiently, drifting may result. Precision: Standard measurement range: ±3% of measured value, + 0.3% of final value. Extended measurement range: ±8% of measured value, + 1% of final value.

Technical data

Industry
Industrial

Note
Output signal: 1 analog output 4 mA ... 20 mA + 1 digital/analog output (PNP, NPN, push-pull, 4 mA ... 20 mA / switchable)+1 digital output (PNP, NPN, push-pull, switchable), IO-Link V1.1 (COM3 / 230K4 baud)

Switching principle
Flow measuring principle: calorimetric

Protocol
IO-Link

Nominal flow Qn min., standard
14.7 l/min

Nominal flow Qn max., standard
2945 l/min

Nominal flow Qn min., extended
2945 l/min

Nominal flow Qn max., extended
4417 l/min

Compressed air connection
G 1″

Certificates
CE declaration of conformity
RoHS

Working pressure min.
0 bar

Working pressure max
16 bar

Min. ambient temperature
-20 °C

Max. ambient temperature
60 °C

Min. medium temperature
-20 °C

Max. medium temperature
60 °C

Medium
Compressed air
Argon

Nitrogen
Helium
Carbon dioxide

Display
OLED

Flow display unit
l/sec
l/min
m³/min
m³/h
ft³/s
m³/min

Pressure display unit
bar
psi

Temperature display unit
°C
°F

Electrical connection
Plug

Electrical connection
M12x1

Electrical connection
5-pin

Electrical connection
A-coded

Output signal digital
PNP, NPN, push-pull, 1x IO-Link

Output signal analog
4 ... 20 mA

Power consumption max.
5 W

Operating voltage DC, min.
17 V DC

Operating voltage DC, max.
30 V DC

Response time
< 0.3 s

Short circuit resistance
short circuit resistant

Shock resistance max.
30 g, 11 ms

Vibration resistance
1 g (10 - 2000 Hz) IEC 60068 - 2-6

Reproducibility
± 1.5% of the measured value

Protection class
IP65
IP67 according to IEC 60529

Weight
0.685 kg

Material

Housing material
Polyamide
Polycarbonate
Aluminum

Pipe material
Stainless Steel

Seal material sensor
Fluorocarbon caoutchouc

Part No.
G653AV006JA0000

Dimensions in mm

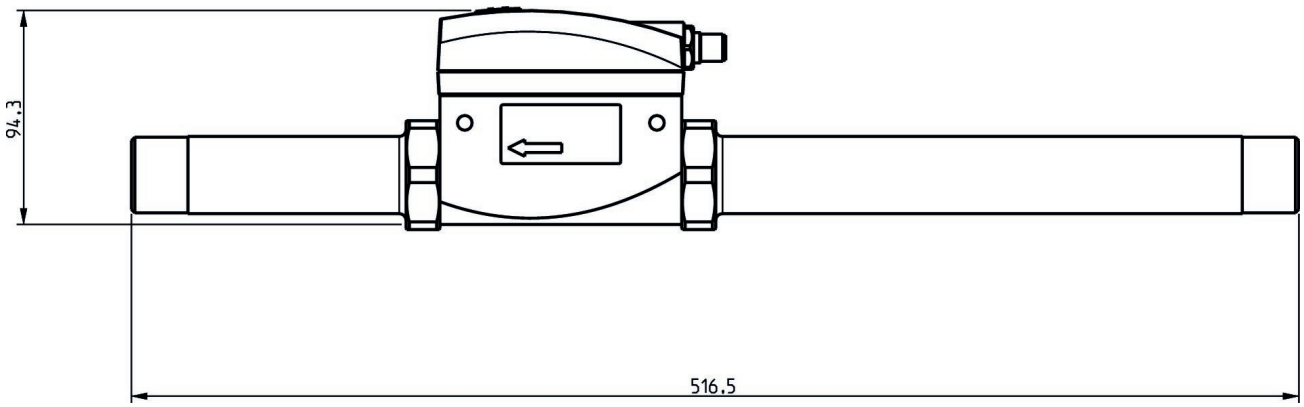

Dimensions in inches

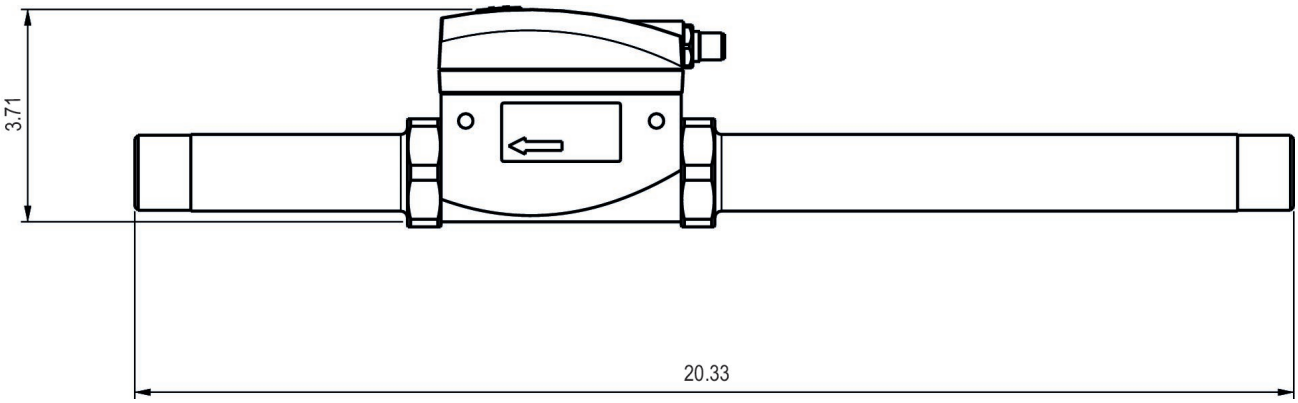

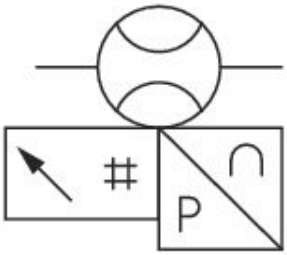

Pin assignments

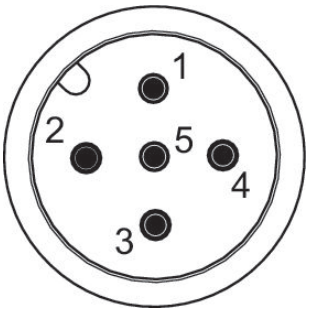

Pin	Allocation	Wire color	
1	L+	brown	Supply Voltage
2	QA (output 4 ... 20 mA)	white	
3	m = mass	blue	
4	C/Q1 (IO-Link/switch output)	black	
5	Analog output 4 ... 20 mA	yellow	

Series AF2 flow sensor, 653 pipe version with pipe, IO-Link

8653AV006JA0000

Series 653

- The pressure dew point must be at least 15 °C under ambient and medium temperature and may not exceed 3 °C. The protection class is only ensured when the plug is mounted properly. For detailed information, see operating instructions. Liquid oil or water must be separated via prefiltering. If it is not separated sufficiently, drifting may result. Precision: Standard measurement range: ±3% of measured value, + 0.3% of final value. Extended measurement range: ±8% of measured value, + 1% of final value.

Technical data

Industry
Industrial

Note
Output signal: 1 analog output 4 mA ... 20 mA + 1 digital/analog output (PNP, NPN, push-pull, 4 mA ... 20 mA / switchable)+1 digital output (PNP, NPN, push-pull, switchable), IO-Link V1.1 (COM3 / 230K4 baud)

Switching principle
Flow measuring principle: calorimetric

Protocol
IO-Link

Nominal flow Qn min., standard
14.7 l/min

Nominal flow Qn max., standard
2945 l/min

Nominal flow Qn min., extended
2945 l/min

Nominal flow Qn max., extended
4417 l/min

Compressed air connection
1″ NPT

Certificates
CE declaration of conformity
RoHS

Working pressure min.
0 bar

Working pressure max
16 bar

Min. ambient temperature
-20 °C

Max. ambient temperature
60 °C

Min. medium temperature
-20 °C

Max. medium temperature
60 °C

Medium
Compressed air
Argon

Nitrogen
Helium
Carbon dioxide

Display
OLED

Flow display unit
l/sec
l/min
m³/min
m³/h
ft³/s
m³/min

Pressure display unit
bar
psi

Temperature display unit
°C
°F

Electrical connection
Plug

Electrical connection
M12x1

Electrical connection
5-pin

Electrical connection
A-coded

Output signal digital
PNP, NPN, push-pull, 1x IO-Link

Output signal analog
4 ... 20 mA

Power consumption max.
5 W

Operating voltage DC, min.
17 V DC

Operating voltage DC, max.
30 V DC

Response time
< 0.3 s

Short circuit resistance
short circuit resistant

Shock resistance max.
30 g, 11 ms

Vibration resistance
1 g (10 - 2000 Hz) IEC 60068 - 2-6

Reproducibility
± 1.5% of the measured value

Protection class
IP65
IP67 according to IEC 60529

Weight
0.685 kg

Material

Housing material
Polyamide
Polycarbonate
Aluminum

Pipe material
Stainless Steel

Seal material sensor
Fluorocarbon caoutchouc

Part No.
8653AV006JA0000

Dimensions in mm

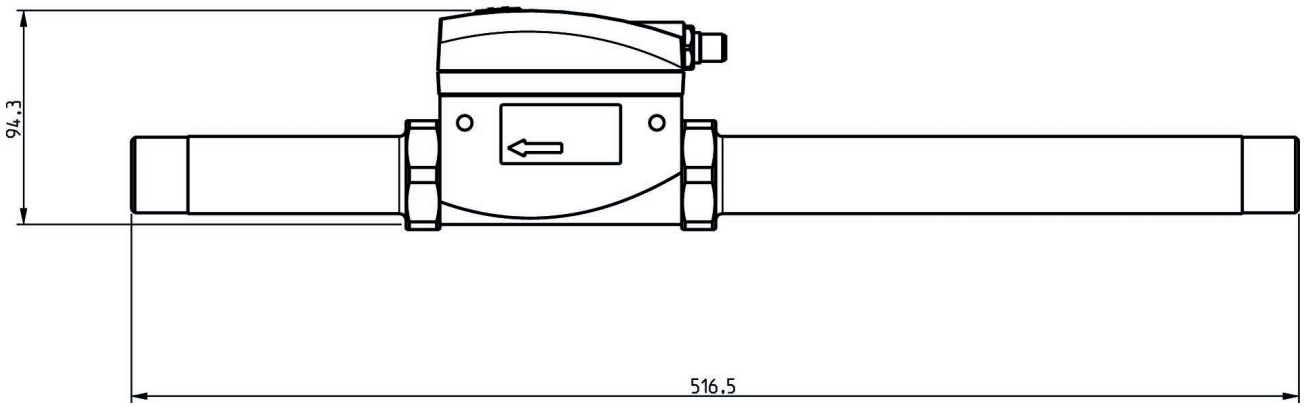

Dimensions in inches

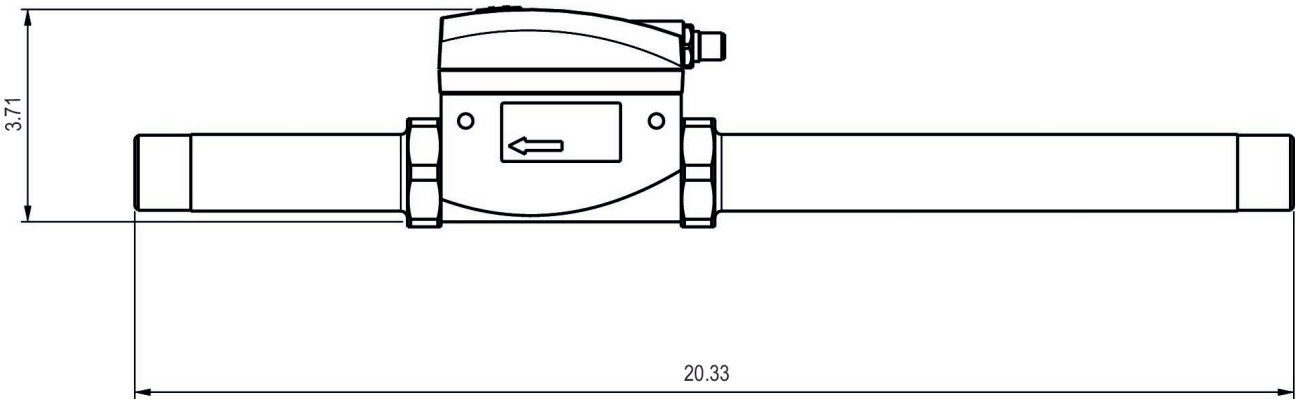

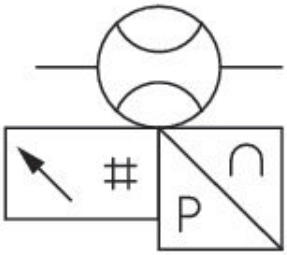

Pin assignments

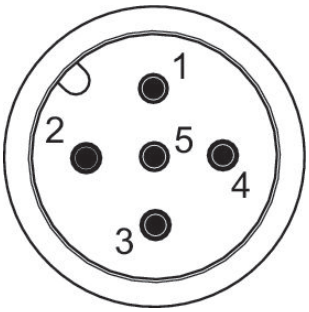

Pin	Allocation	Wire color	
1	L+	brown	Supply Voltage
2	QA (output 4 ... 20 mA)	white	
3	m = mass	blue	
4	C/Q1 (IO-Link/switch output)	black	
5	Analog output 4 ... 20 mA	yellow	

Series AF2 flow sensor, 653 pipe version with pipe, Ethernet

G653AV006JA0010

Series 653

- The pressure dew point must be at least 15 °C under ambient and medium temperature and may not exceed 3 °C. The protection class is only ensured when the plug is mounted properly. For detailed information, see operating instructions. Liquid oil or water must be separated via prefiltering. If it is not separated sufficiently, drifting may result. Precision: Standard measurement range: ±3% of measured value, + 0.3% of final value. Extended measurement range: ±8% of measured value, + 1% of final value.

Technical data

Industry
Industrial

Note
Integrated web server, 48 VDC connection via Power over Ethernet

Switching principle
Flow measuring principle: calorimetric

Protocol
TCP/IP
OPC UA
MQTT

Nominal flow Qn min., extended
2945 l/min

Nominal flow Qn max., extended
4417 l/min

Compressed air connection
G 1″

Certificates
CE declaration of conformity
RoHS

Working pressure min.
0 bar

Working pressure max
16 bar

Min. ambient temperature
-20 °C

Max. ambient temperature
60 °C

Min. medium temperature
-20 °C

Max. medium temperature
60 °C

Medium
Compressed air
Argon
Nitrogen
Helium
Carbon dioxide

Display
OLED

Flow display unit
l/sec
l/min
m³/min
m³/h
ft³/s
m³/min

Pressure display unit
bar
psi

Temperature display unit
°C
°F

Electrical connection
Plug

Electrical connection
M12x1

Electrical connection
8-pin

Electrical connection
X-coded

Power consumption max.
5 W

Operating voltage DC, min.
36 V DC

Operating voltage DC, max.
57 V DC

Response time
< 0.3 s

Short circuit resistance
short circuit resistant

Shock resistance max.
30 g, 11 ms

Vibration resistance
1 g (10 - 2000 Hz) IEC 60068 - 2-6

Reproducibility
± 1.5% of the measured value

Protection class
IP65
IP67 according to IEC 60529

Weight
0.685 kg

Material

Housing material
Polyamide
Polycarbonate
Aluminum

Pipe material
Stainless Steel

Seal material sensor
Fluorocarbon caoutchouc

Part No.
G653AV006JA0010

Dimensions in mm

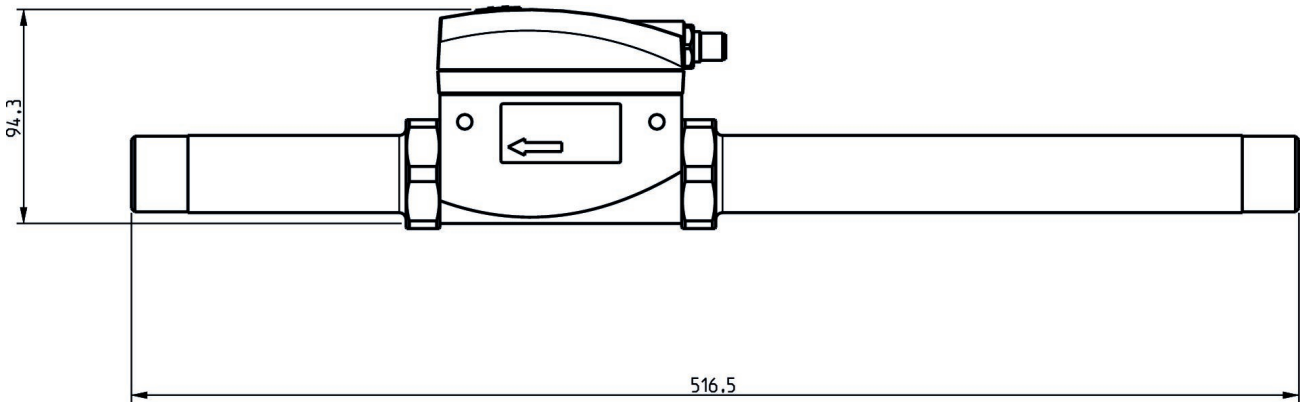

Dimensions in inches

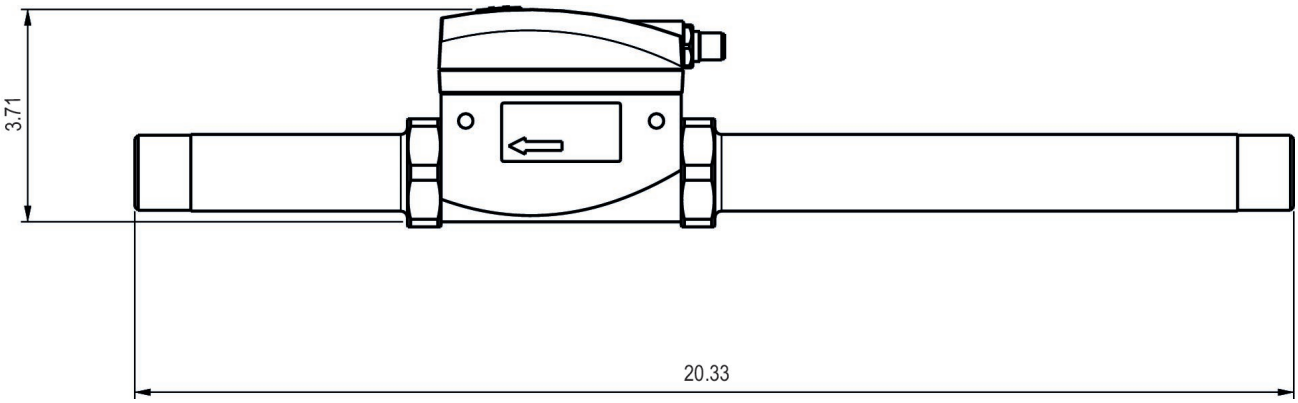

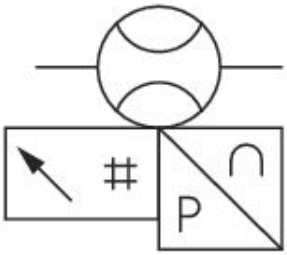

Pin assignments

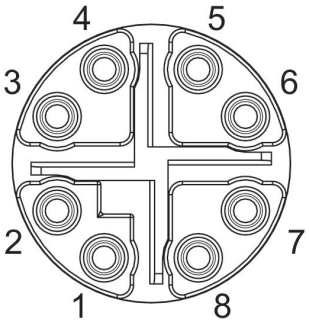

Pin	RJ45	Wire color	Identification	10/100 Mbit
1	1	WH / OG	TX(+) + POE	TxData+
2	2	OG	TX(-) + POE	TxData+
3	3	WH / GN	RX(+) - POE	TxData-
4	6	GN	RX(-) - POE	TxData-
7	5	WH / BU	POE+	
8	4	BU	POE+	
5	7	WH / BN	POE-	
6	8	BN	POE-	

Series AF2 flow sensor, 653 pipe version with pipe, Ethernet

8653AV006JA0010

Series 653

- The pressure dew point must be at least 15 °C under ambient and medium temperature and may not exceed 3 °C. The protection class is only ensured when the plug is mounted properly. For detailed information, see operating instructions. Liquid oil or water must be separated via prefiltering. If it is not separated sufficiently, drifting may result. Precision: Standard measurement range: ±3% of measured value, + 0.3% of final value. Extended measurement range: ±8% of measured value, + 1% of final value.

Technical data

Industry
Industrial

Note
Integrated web server, 48 VDC connection via Power over Ethernet

Switching principle
Flow measuring principle: calorimetric

Protocol
TCP/IP
OPC UA
MQTT

Nominal flow Qn min., extended
2945 l/min

Nominal flow Qn max., extended
4417 l/min

Compressed air connection
1″ NPT

Certificates
CE declaration of conformity
RoHS

Working pressure min.
0 bar

Working pressure max
16 bar

Min. ambient temperature
-20 °C

Max. ambient temperature
60 °C

Min. medium temperature
-20 °C

Max. medium temperature
60 °C

Medium
Compressed air
Argon
Nitrogen
Helium
Carbon dioxide

Display
OLED

Flow display unit
l/sec
l/min
m³/min
m³/h
ft³/s
m³/min

Pressure display unit
bar
psi

Temperature display unit
°C
°F

Electrical connection
Plug

Electrical connection
M12x1

Electrical connection
8-pin

Electrical connection
X-coded

Power consumption max.
5 W

Operating voltage DC, min.
36 V DC

Operating voltage DC, max.
57 V DC

Response time
< 0.3 s

Short circuit resistance
short circuit resistant

Shock resistance max.
30 g, 11 ms

Vibration resistance
1 g (10 - 2000 Hz) IEC 60068 - 2-6

Reproducibility
± 1.5% of the measured value

Protection class
IP65
IP67 according to IEC 60529

Weight
0.685 kg

Material

Housing material
Polyamide
Polycarbonate
Aluminum

Pipe material
Stainless Steel

Seal material sensor
Fluorocarbon caoutchouc

Part No.
8653AV006JA0010

Dimensions in mm

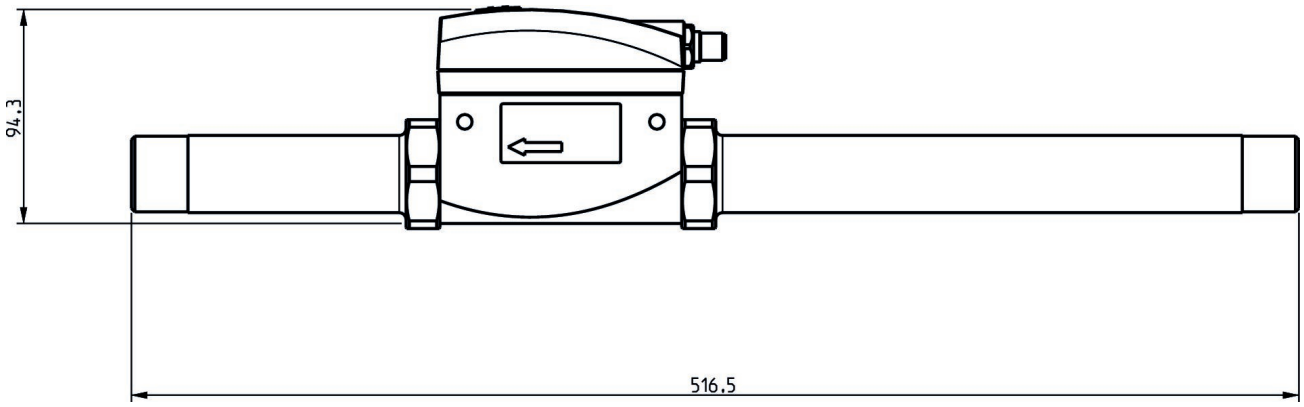

Dimensions in inches

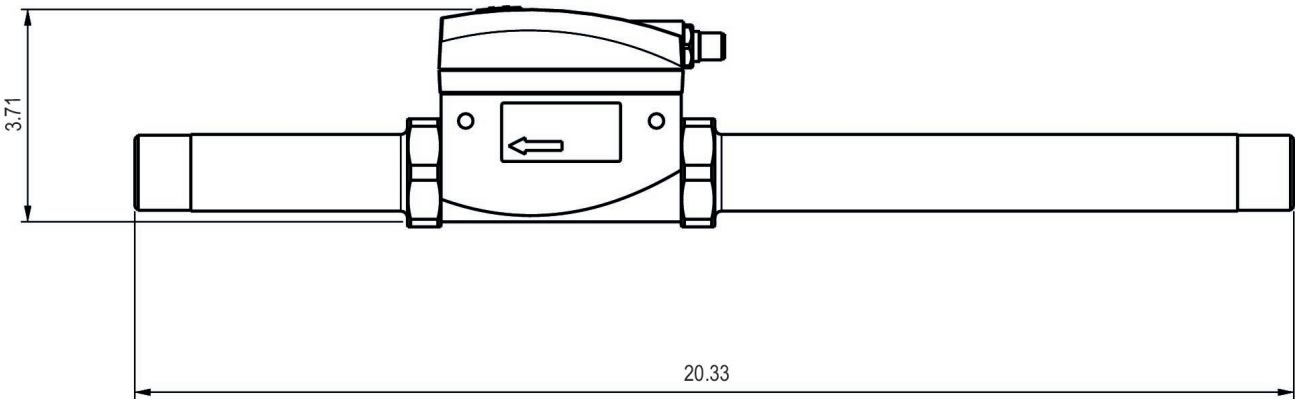

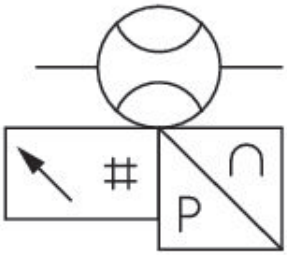

Pin assignments

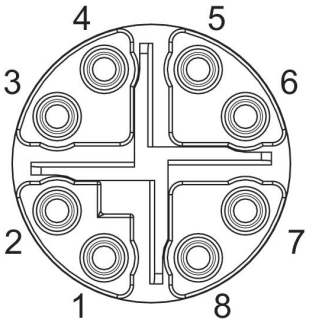

Pin	RJ45	Wire color	Identification	10/100 Mbit
1	1	WH / OG	TX(+) + POE	TxData+
2	2	OG	TX(-) + POE	TxData+
3	3	WH / GN	RX(+) - POE	TxData-
4	6	GN	RX(-) - POE	TxData-
7	5	WH / BU	POE+	
8	4	BU	POE+	
5	7	WH / BN	POE-	
6	8	BN	POE-	

Round plug connector, Series CON-RD

- Socket M12x1 5-pin A-coded angled 90°
- open cable ends
- with cable
- shielded

Ambient temperature min./max.	-25 ... 80 °C
Operational voltage	48 V AC/DC
Protection class	IP67
Wire cross-section	0.34 mm²
Weight	See table below

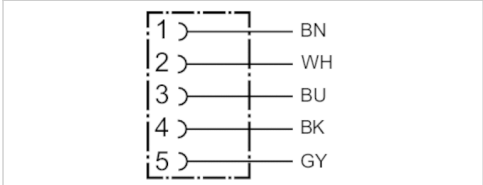

Technical data

Part No.	Max. current	Number of wires	Cable-Ø	Cable length	Weight
R419800109	4 A	5	6 mm	2.5 m	0.145 kg
R419800110	4 A	5	6 mm	5 m	0.27 kg
R419800546	4 A	5	6 mm	10 m	0.514 kg

Technical information

Material	
Housing	Thermoplastic elastomer
Cable sheath	Polyurethane

Dimensions

Dimensions

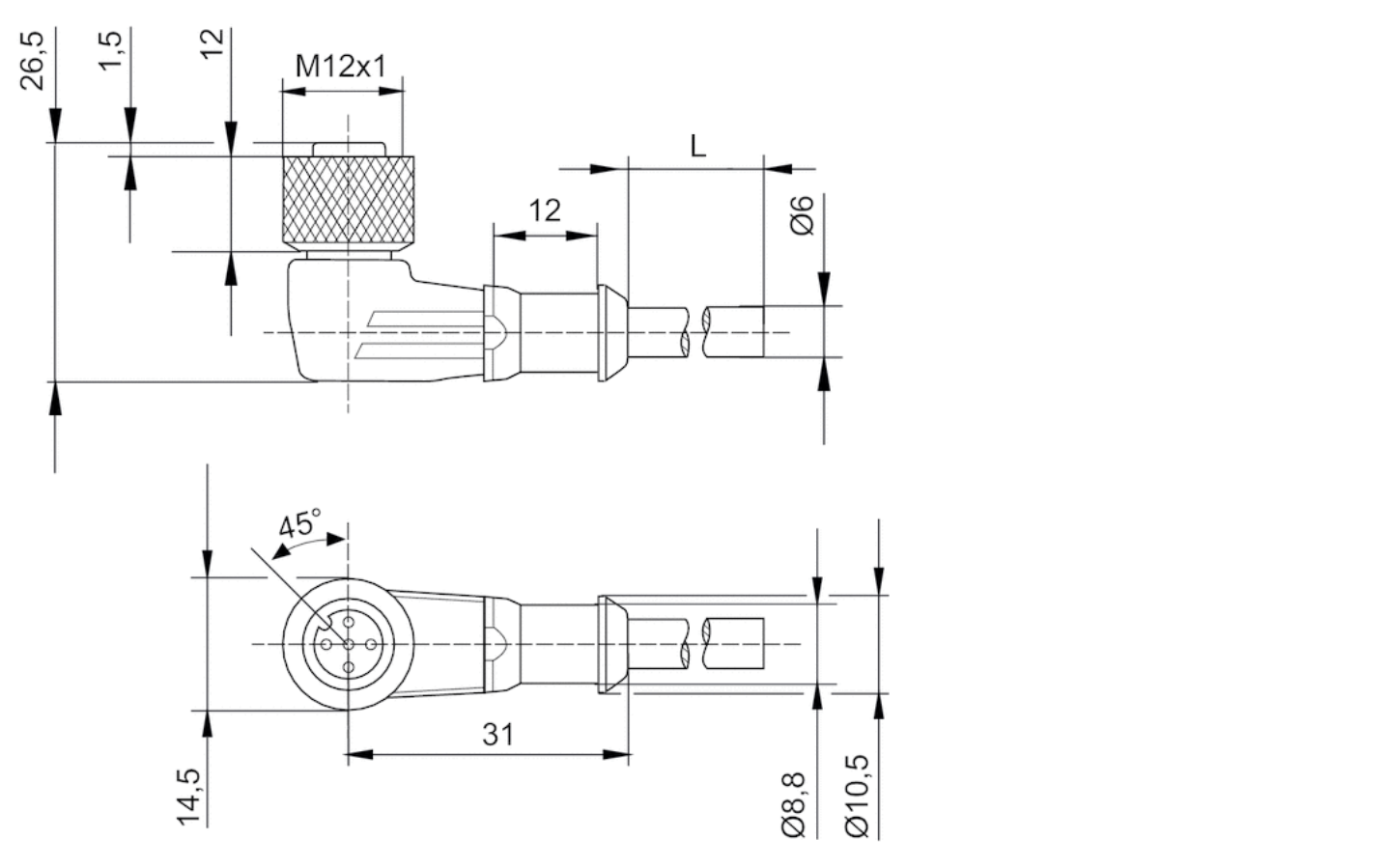

L = length

Pin assignments

Pin assignment, socket

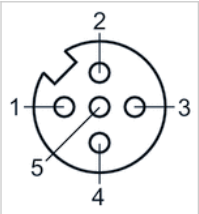

(1) BN=brown
(2) WH=white
3) BU=blue
(4) BK=black
(5) GY=grey

Round plug connectors with cable, Series CON-RD

- Plug M12x1 8-pin X-coded angled 90°
- Plug RJ45 8-pin X-coded straight
- shielded

Ambient temperature min./max.	-25 ... 85 °C
Protection class	IP66K
Wire cross-section	0.14 mm²

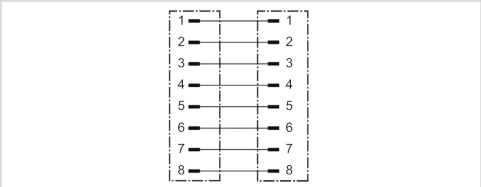

Technical data

Part No.	Max. current	Cable length
R412027647	0.5 A	5 m

Technical information

Material	
Cable sheath	Polyurethane

Dimensions

Dimensions

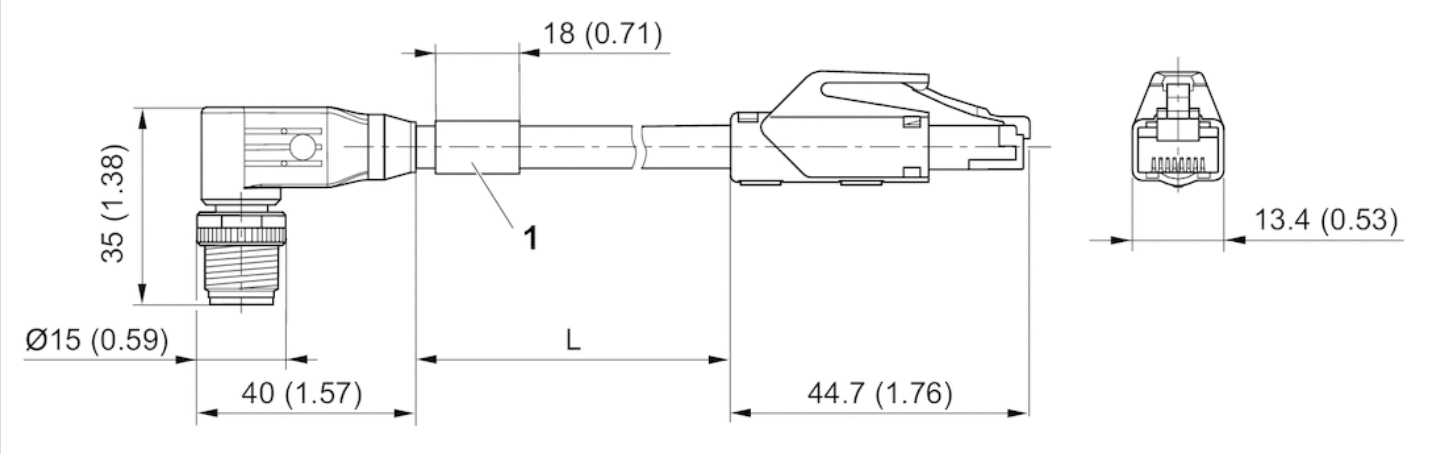

1) Name plate

Pin assignments

Plug pin assignment

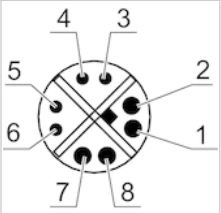

Plug pin assignment

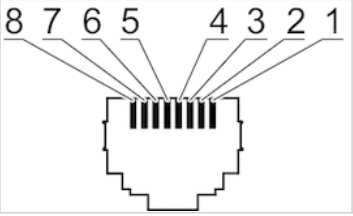

+34 943 377 740 | info@diprax.es | www.diprax.es

Polígono Industrial Belartza, Gurutzegi Kalea, 17 Pab. D4 y D5, 20018 San Sebastián-Donostia